SERVICE NOTEBOOK

REFRIGERATION
VCBB363 DFBB363 DDBB363 DTBB363

Viking Preferred Service

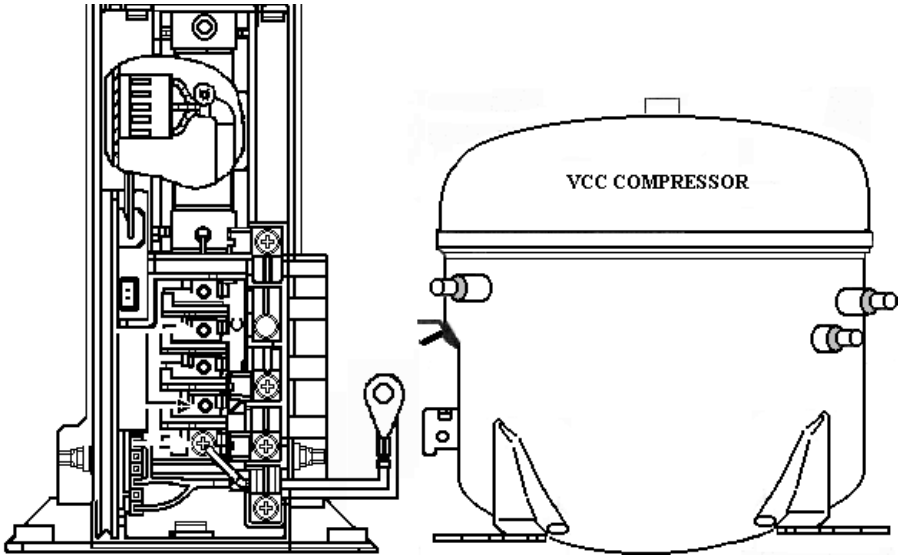

VIKING RANGE CORPORATION, P.O. DRAWER 956, GREENWOOD, MS 38930-USA

TABLE OF CONTENTS

Technotes---------- 4
General Specifications
Performance Test Chart
Specifications and Features---------- 5
R134a Refrigerant Service Information---------- 6
Safety Precautions---------- 7
Equipment & Tools---------- 8
Evacuation and Charging---------- 12
Display Panel Operation---------- 14
Electronic Function Description---------- 16
Program Mode "A"---------- 17
Program Mode "B"---------- 18
Electronic Testing---------- 19
High Voltage Board Check Points---------- 20
High Voltage Board Check Points---------- 21
Wiring Schematic---------- 22
Variable Capacitor Compressor (VCC) Control Unit---------- 23
Speed Control Interface---------- 24
Wiring Diagram---------- 25
Freezer Compartment Theory of Operation---------- 26
Refrigerator Compartment Theory of Operation---------- 27
Refrigerator / Freezer Compartment Theory of Operation---------- 28
Adaptive Defrost Theory of Operation---------- 29
VCC Starting Procedures / Normal Operation---------- 30
Inverter Shutdown---------- 31
Protections---------- 31
Adapter Board Logic Flowchart---------- 32
Control Board Operation---------- 33
VCC Troubleshooting Guide---------- 34
Icemaker---------- 36

TECHNOTES

WARNINGS

To avoid electrical shock, which can cause severe personal injury or death, disconnect power to refrigerator using power switch before servicing. Wires removed during disassembly must be replaced on proper terminals to insure correct grounding and polarization. After servicing, reconnect power using power switch.

ALERT

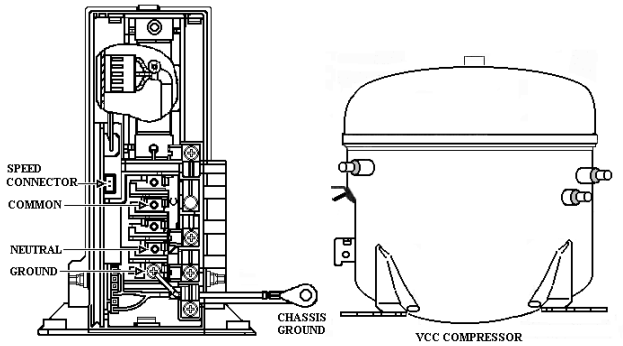

DO NOT CONNECT COMPRESSOR TO 115 VAC

GENERAL SPECIFICATIONS

Model	VCBB363
Internal Volume Capacity	20.3 cu. ft.
Electrical Requirements	115VAC, 60Hz and 9.9 AMPS
Refrigerant Type	HFC - 134a
Overall Width	35 inches
Overall Depth with Handle Includes door extrusions	24 inches
Overall Heigth (rollers to top of Air Grille)	83 3/4" to 84 1/4"

Unit Performance Test Chart

	KW/24hr + 0.4	Percent Run Time	Cycle/24hr ± 25%	Refrigerator Compartment Food Average Temperature +- 3%	Freezer Compartment Food Average Temperature +- 3%	
Ambient °F	65° 90° 110°	65° 90° 110°	65° 90° 110°	65° 90° 110°	65° 90° 110°	
	1.0 1.9 4.1	46 80 100	16 9 0	36 41 44	-1 -1 -1	
Temperature Relationship Test Chart						
Ambient °F	T-1 Outlet ± 3% F	T-2 Inlet + 3%F	T-3 Suction Line +7%	Average Total Watttage 10%	Suction Pressure 2 psig	Head Pressure 2psig
	65° 110°	65° 110°	65° 110°	65° 110°	65° 110°	65° 110°
	-13 -10	-13 -3	18 95	87 169	0 0	135/215 250*

*Discharge pressure at low ambient are provided for both low and high speeds.

SPECIFICATIONS AND FEATURES

The VCC receives one of 3 signals from the adaptor board: *OFF*, *E* frequency, and *H* frequency.

OFF STATE CRITERION

The VCC control signal is *OFF* whenever the voltage drive to the compressor relay is off.

H (HIGH COOLING CAPACITY) STATE CRITERIA

The VCC control signal goes to the *H* frequency when any of the following conditions are detected:

- The first compressor cycle after power restoration. The high capacity provides a faster initial pull-down to control temperature.
- The compressor duty cycle exceeds DCHT, 90%. Once triggered, this mode persists until the duty cycle drops below DCHX, 50%. A high external ambient increases the duty cycle.
- Compressor operation for more than 3 hours. The longest normal run time at 90° F. is 2.5 to 3 hours. A longer run time implies the user activated the maximum refrigerate or maximum freeze mode or there is an unusual cooling load. The mode persists until the duty cycle drops below DCHX.

E (EFFICIENT COOLING STATE CRITERION

The VCC control signal assumes the *E* state when none of the conditions above for the *H* state are valid.

RUN TIME HIGH TRIGGER (RTHT) = 180 MINUTES DUTY CYCLE HIGH TRIGGER (DCHT) = 90 %
DUTY CYCLE LOW TRIGGER (DCLT) = 50 %
ENERGY SPEED = 65.00 Hz x 30 1950 rpm
HIGH SPEED = 114.67 Hz x 30 3440 rpm
BOARD COLOR = GREEN (BOTTOM MOUNT REFRIGERATOR)

Note: Compressor Speed = Frequency x Motor Constant

VCC (DC) COMPRESSOR SPECIFICATIONS

Nominal BTU/HR	640 BTU's
BTU/HR Range	401 - 1086 BTU's
Nominal Watts	103 Watts
Watt Range	75 - 207 Watts
Frequency Hz	
Energy	75 Hz ± 2.5%
Pull Down	114.67 Hz
Frequency Range	53 - 150 Hz
Resistance @77°F	
Run Windings	9.84 Ω ± 2.5% Variance
Start Windings	9.84 Ω ± 2.5% Variance
Amps	
Lock Rotor	3.3 amps
Full load	3.3 amps

Oil	
Type	ICI RL 10H
Fl. Oz.	14.54 oz
CC	430 cc
Max allowable H20 content in oil is 100 PPM for oil charged compressors. Min allowable oil for pour out is 400cc or 13.5oz Fl. Oz.	
Refrigerant Type	R134a
Inverter Voltage	115V/60Hz
Compressor Voltate	230VDC 3 Phase

R134a REFRIGERANT
SERVICE INFORMATION

This product uses R134a refrigerant. This refrigerant requires synthetic Ester Oil in the compressor. This cooling system does not tolerate contamination from any of the following:

- Other Refrigerants
- Moisture
- Petroleum-based Lubricants
- Silicone Lubricants
- Cleaning Compounds
- Rust Inhibitors
- Leak Detection Dyes
- Any Other Type of Additive

As a result the following precautions should be observed

- Use equipment dedicated to R134a sealed system only.
- Do not leave a replacement compressor open to the atmosphere for more than 10 minutes.
- Always replace the filter-drier when performing any repairs on the sealed system.
- If the rubber plugs on the service replacement compressor appear to have been tampered with or removed, **DO NOT USE THE COMPRESSOR**. Get another one.
- The filter-drier MUST be cut from the sealed system. Never un-braze the filter-drier from system tubing. Applying heat will drive moisture back into the sealed system.

HEALTH AND SAFETY HANDLING	**134a**
Allowable Overall Exposure Limit	1,000 ppm
Vapor Exposure to Skin	No Effect
Liquid Exposure to Skin	Can Cause Frostbite
Vapor Exposure to Eyes	Very Slight Irritation
Liquid Exposure to Eyes	Can Cause Frostbite
Above Minimum Exposure Limit	Can Cause Asphyxiation. Tachycardia and Cardiac arrhythmias.
Safety and Handling	Wear appropriate Skin and Eye protection. Use adequate Ventilation.
Spill Management	Remove or Extinguish Ignition or Combustion Sources. Evacuate or Ventilate Area.
Fire and Explosion Hazards	May Decompose if contact with Flames and Heating elements. Container May Explode IF Heated Due to Pressure Rise. Combusion Products are Toxic.
Storage Conditions	The Procedures/Rules for R12 also Apply to 134a.
Disposal Procedure	Reclaim

SAFETY PRECAUTIONS

⚠ CAUTION

TREAT LIQUID AND VAPORIZED REFRIGERANT WITH RESPECT. IN CASE OF ACCIDENTAL RELEASE OF LARGE AMOUNTS OF REFRIGEANT:

Vapors from the refrigerant can reduce the oxygen available for breathing and cause suffocation.

Refrigerant decomposes rapidly and becomes toxic and corrosive when it reaches approximately 1100° F.

Refrigerant can cause skin irritation and frostbite. Always wear gloves and safety glasses or goggles when working with liquid or vaporized refrigerant.

WHEN WORKING WITH REFRIGERANT, DO NOT:

- Purposely release refrigerants into the environment.
- Inhale refrigerant vapors
- Use refrigerant in a unventilated area
- Allow refrigerant to contact your skin, eyes or clothing.

⚠ WARNING

SAFETY INFORMATION

If refrigerant comes in contact with eyes, flush with fresh water for at least 15 minutes.

If refrigerant comes in contact with exposed skin, flush with fresh water. begin with the water cold and gradually increase the water temperature to warm the skin slowly.

If refrigerant vapor is inhaled, move to an area of fresh air immediately. If breathing has stopped, give mouth-to-mouth artificial respiration. If available, give the victim oxygen. Avoid administering stimulants. Do not give adrenaline (epinephrine). Call a physician immediately.

EQUIPMENT AND TOOLS

⚠ CAUTION

A separate set of hoses and hand valves must be maintained for use with sealed systems with R134a refrigerant. Equipment used with CFC refrigerants will contaminate R134a (HFC) sealed systems.

EQUIPMENT DESCRIPTION

Tank of Liquid Refrigerant – Care should be taken to be sure the proper refrigerant is available. (Fig. 1)

⚠ CAUTION

Handle the tank of liquid refrigerant properly. The contents of the tank are under pressure. Observe the following precautions and **DO NOT**:

- Drop or handle the tank roughly
- Tamper with any installed safety relief valves
- Store the tank in direct sunlight or in a damp location.
- Heat the tank above 125° F.
- Refill the tank

Empty tanks should be disposed of properly.

Charging Scale – An electronic or computerized charting scale measures the amount of liquid refrigerant charge that is dispensed into a sealed system. (Fig. 2)

The amount of refrigerant dispensed into the sealed system is indicated on a Liquid Crystal Display (LCD). The LCD is calibrated in .5 ounces or .01 gram increments or smaller. The charging scale can be used to monitor the amount of refrigerant necessary to back flush a system.

Charging Hose Configuration – One hose 4 to 6 feet long should be attached to a pigtail consisting of a ball type hand valve with a 45° threaded fitting. A low-loss adapter should be connected to the 45° threaded fitting. (Fig. 3)

ILLUSTRATION

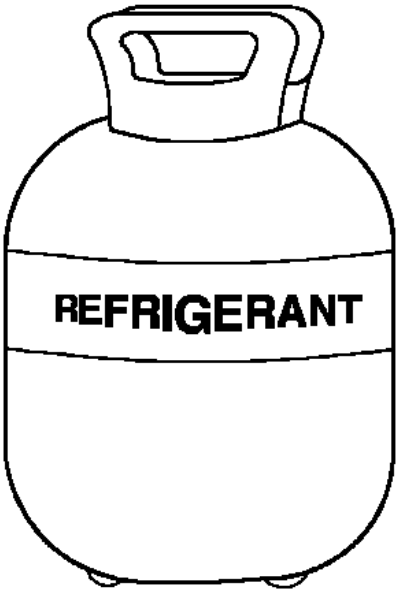

Fig. 1

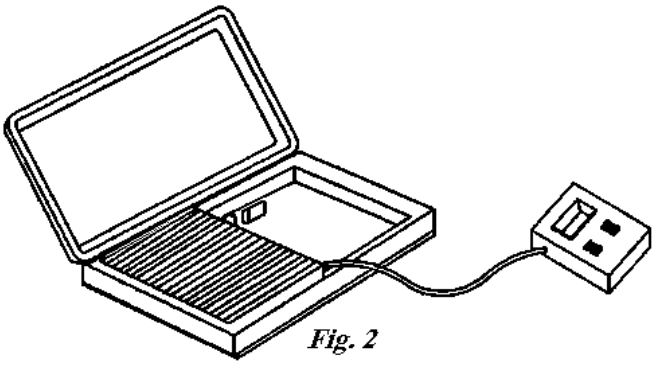

Fig. 2

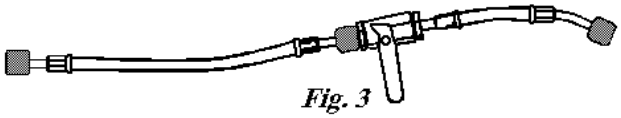

Fig. 3

EQUIPMENT DESCRIPTION

ILLUSTRATION

Purging Hose Configuration – This arrangement of three 4' to 6' hoses with low-loss fittings and a ¼" male flare Tee fitting can be used to purge a sealed system for both operating and non-operating compressor situations. No hand valves are required. (Fig. 4)

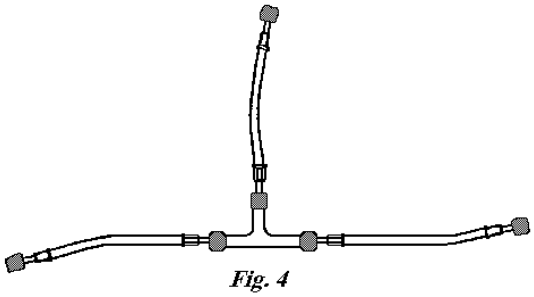

Fig. 4

Piercing Tool with Access Valve – These access valves can be installed without the need for brazing and **will not** remain on the system when repairs are completed. (Fig. 5)

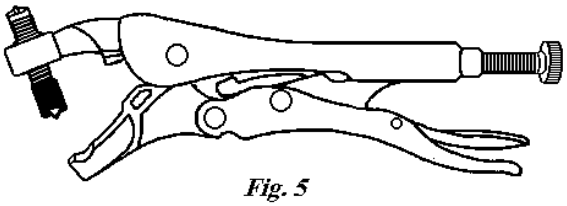

Fig. 5

Process Tube Adaptor Kit – This kit allows the attachment of hand valves to various sizes of exposed tubing ends during back flushing, charging, and/or evacuating a sealed system. (Fig. 6)

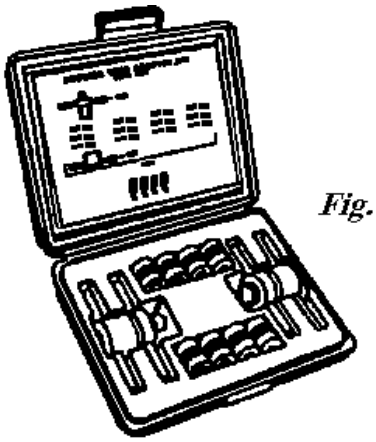

Fig. 6

Bubble Solution or Electronic Leak Detector – Bubble solution is the recommended means of checking for high-side leaks after repairing a pressurized sealed system. (Fig. 7) An electronic leak detector will also detect the presence of any refrigerant escaping from the sealed system. (Fig. 8)

Fig. 7

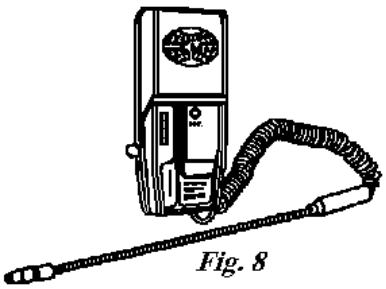

Fig. 8

EQUIPMENT DESCRIPTION

Swaging Kit – A swaging tool kit may be needed to expand system tubing to fit replacement parts. (Fig. 19)

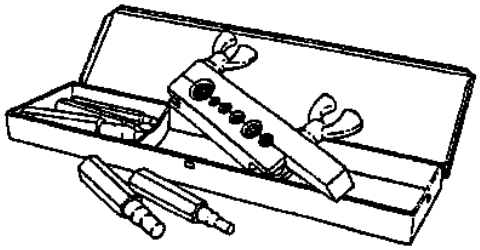

Fig. 9

ILLUSTRATION

Heat Gun – A heat gun can be used to heat a non-operating compressor or the evaporator during purge and the refrigerant tank to increase charging pressure. Many heat guns have a stand that allows continuous operation while other repairs are made. A heat gun rated at 1500 watts or greater is recommended. (Fig. 10)

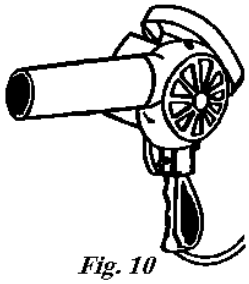

Fig. 10

Single MC-Size Fuel Tank of Acetylene with a Double Tip Torch – The MC-size single fuel tank of acetylene gas is very portable and easy to use. Two torches are acceptable for use: A double-tip torch heats both sides of the joint at the same time and is less likely to scorch the inside of the tubing; A single-tip Turbo-brand torch equipped with a flame reflector will also heat both sides of a joint and provide a hotter flame. A striker is used to light the torch. (Fig.11)

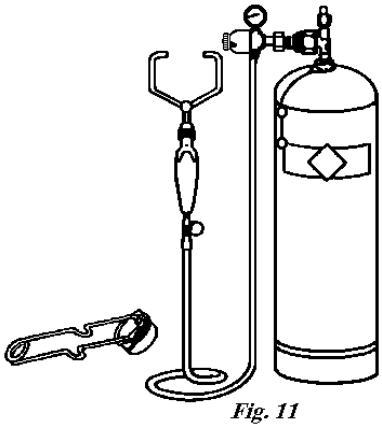

Fig. 11

15% Silver Brazing Alloy (Silfos) – Silfos can be used for all copper to copper sealed system brazing. (Fig. 12) A 45 % silver solder and flux must be used to braze copper to steel. (Fig. 13)

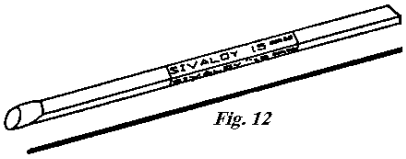

Fig. 12

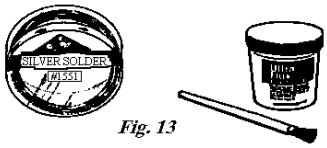

Fig. 13

EQUIPMENT DESCRIPTION	ILLUSTRATION
Inspection Mirror, Tubing Cutter, Triangular File and Steel Brush – The inspection mirror should be small enough to inspect in tight spaces around joints. A mini-cutter will be required to cut tubing in tight spaces where a standard cutter will not turn. A triangular file will be needed to score capillary tubing. A steel brush will be required to clean brazed joints. (Fig. 14)	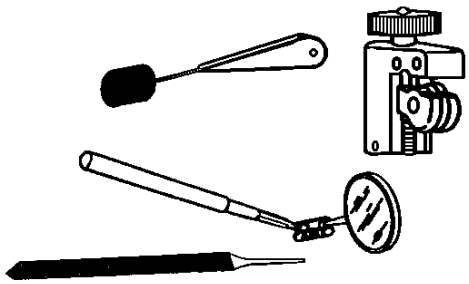 *Fig. 14*
Heat Trap Paste – Heat trap paste should be applied to the tubing between the brazing site and the components or area that must be protected from high heat. (Fig. 15)	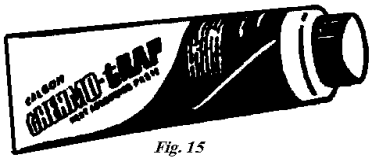 *Fig. 15*
Refrigeration Sanding Cloth – Refrigeration sanding cloth will be need to clean all tubing ends and other component parts that will be brazed. **Do Not Use Oil Based Sanding Cloth such as Emery Cloth.** (Fig. 16)	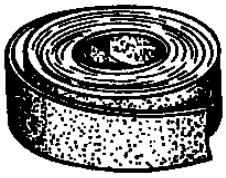 *Fig. 16*
Tubing Bender – Used to form system tubing during repairs. (Fig. 17)	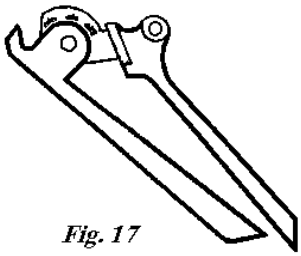 *Fig. 17*

WARNING

To avoid electrical shock which can cause severe personal injury or death, disconnect power to refrigerator using power switch before servicing. Wires removed during disassembly must be replaced on proper terminals to insure correct earth ground and polarization. After servicing, reconnect power using power switch.

Evacuation and Charging

CAUTION: To avoid risk of fire, sealed refrigeration system must be air free. To reduce risk of air contamination, follow evacuation procedures exactly.

NOTE: Before opening any refrigeration system, EPA regulations require refrigerant in system to be captured for safe disposal.
Proper evacuation of sealed refrigeration system is an important service procedure. Usable life and operational efficiency greatly depends upon low completely air, moisture and other non-condensables are evacuated from sealed system.

Air in sealed system causes high condensing temperature and pressure, resulting in increased power requirements and reduced performance.

Moisture in sealed system chemically reacts with refrigerant and oil to form corrosive hydrofluoric and hydrochloric acids. These acids attack motor windings and parts, causing premature breakdown.

Before opening system, evaporator coil must be at ambient temperature to minimize moisture infiltration into system.

Evacuation: To evacuate sealed refrigeration system:

1. Connect vacuum pump, vacuum tight manifold set with high vacuum hoses, thermocouple vacuum gauge and charging cylinder as shown in illustration. Evacuation should be done through I.D. opening of tubes not through line piercing valve.
2. Connect low side line to compressor process tube.
3. Connect high side line to drier/process tube.
4. Evacuate both simultaneously. With valve "C" and "F" closed, open all other valves and start vacuum pump.

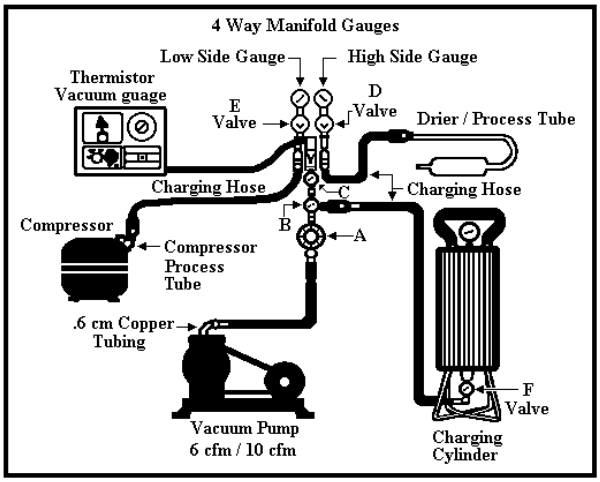

Equipment Setup For Evacuation and Charging

5. After compound gauge (low side) drops to approximately 29 inches gauge, open valve "C" to vacuum thermocouple gauge and take micron reading.

NOTE: A high vacuum pump can only produce a good vacuum if oil in pump is not contaminated.

6. Continue evacuating system until vacuum gauge registers 200 microns.
7. At 200 microns, close valve "A" to vacuum pump and allow micron reading in system to balance. Micron lever will rise.

- If in 2 minutes, micron level stabilizes at 400 microns or below, system is ready to be charges.
- If micron level rises above 400 microns and stabilizes, open valve "A" and continue evacuating.
- If micron reading rises rapidly and does not stabilize, a leak still exists in system. Close valve "A" to vacuum pump an valve "C" to vacuum gauge. Invert charging cylinder and open charging cylinder valve "F" to add partial charge for leak checking. With leak detector, check manifold connections and system for leaks. after locating leak, capture refrigerant, repair leak, and begin at step 1.

WARNING

To avoid electrical shock which can cause severe personal injury or death, disconnect power to refrigerator using power switch before servicing. Wires removed during disassembly must be replaced on proper terminals to insure correct earth ground and polarization. After servicing, reconnect power using power switch.

Charging

NOTE: Do not use captured or recycled refrigerant in Viking units. Captured or recycled refrigerant voids any warranty.

NOTE: Charge system with exact amount of refrigerant. See Technical Sheet or refer to unit serial plate for correct refrigerant charge. Inaccurately charged system will cause future problems

NOTE: <u>No Access Valves are to be left on the system after repairs are made.</u>

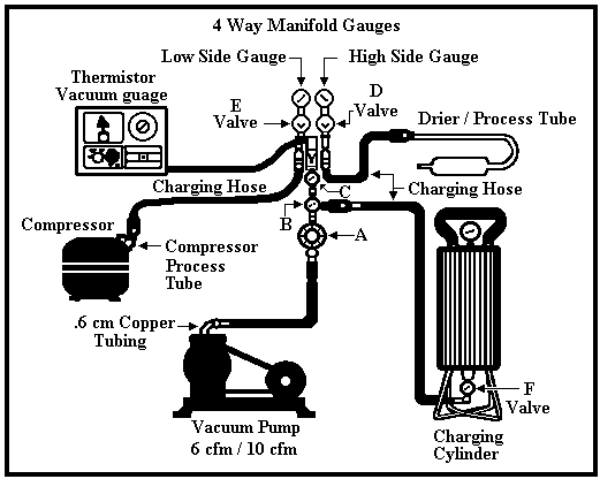

To charge system:

1. Close valves "A" to vacuum pump and "C" to vacuum gauge and "E" to low side manifold gauge.

2. Set scale on dial-a-charge cylinder for corresponding HFC134a pressure reading.

3. Open valve "F" to charging cylinder and let exact amount of refrigerant flow from cylinder into system. Close valve.

   Low side gauge pressure should rise shortly after opening charging cylinder valve as system pressure equalize through capillary tube.

   If pressure does not equalize, a restriction typically exists at capillary/drier braze joint.

4 If pressure equalizes, open valve "E" to low side manifold gauge and pinch off high side drier process tube.
5 Start compressor and draw remaining refrigerant from charging hoses and manifold into compressor through compressor process tube.
6 To check high side, pinch-off drier process tube. Close valve "D" to high side gauge. If high side pressure rises, repeat high side pinch-off and open valve "D". Repeat until high side pinch off does not leak.
7 Pinch-off compressor process tube and remove charging hose. Braze stub closed while compressor is operating.
8 Disconnect power. Remove charging hose and braze high side drier process tube closed.
9 Recheck for refrigerant leaks.

Refrigerant Charge

Refrigerant charge in all capillary tube systems is critical and exact amount is required for proper performance. Factory charges are shown on serial plate. Do not use refrigerant other than shown on serial plate.

DISPLAY PANEL KEYBOARD

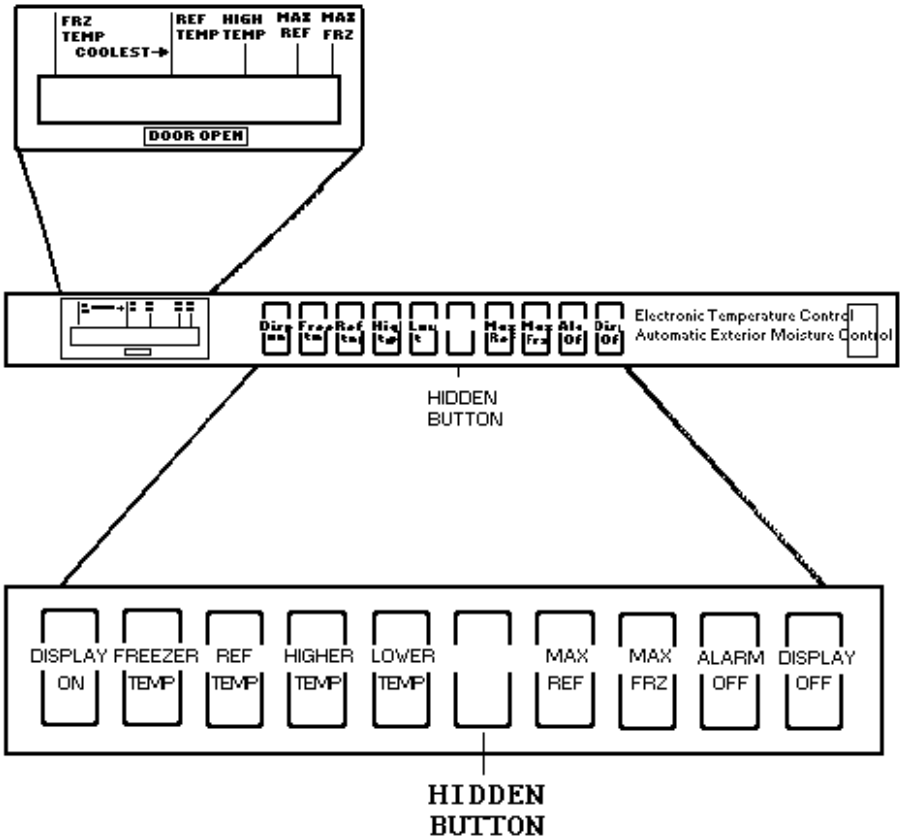

Display Panel Operation

Keyboard Pad Functions
Entry Tone
Indicates a pad was pressed, command read and accepted. Turn off entry tone by pressing and holding Display On pad for 3 to 5 seconds.

Command Accepted Tone
Three short tones indicate command accepted.

Display On Pad
1. Activates control panel. Control panel remains active at least 10 minutes.
2. Turns off Power Up Alarm (flashing lights) after power is first plugged in or after power outage.

Note: All pads, except Alarm Off, are inactive until Display On is pressed.

Freezer Temp Pad
Activates freezer temperature setting mode.
1. Freezer indicator light will glow. Freezer temperature setting will be displayed. Factory setting is 5.
2. Change freezer temperature setting by pressing Higher Temp or Lower Temp Pad.

Ref Temp Pad
Activates refrigerator temperature setting mode.
1. Refrigerator indicator light will glow. Refrigerator temperature setting will be displayed. Factory setting is 5.
2. Change refrigerator temperature setting by pressing Higher Temp or Lower Temp Pad.

Higher Temp Pad
Raises temperature setting one bar at a time. If entry tone is on. Tone will sound at each bar level until top level is reached.
1. Turn on temperature setting function of control panel by pressing Higher Temp Pad.
2. Press and hold Higher Temp pad to raise temperature setting at a faster rate.

Display Panel Operation (con't**)**

Lower Temp Pad
Lowers temperatures setting one bar at a time. If entry tone is on, tone will sound at each bar level until bottom level is reached.
1. Turn on temperature setting function of control panel be pressing Lower Temp Pad.
2. Press and hold Lower Temp Pad to lower temperature setting at a faster rate.

Max Frz Pad
Activates Maximum freezer mode setting freezer temperature to coldest setting for 24 hours or until Max Frz pad is pressed again.
1. Freezer indicator light will glow.
2. To adjust maximum freezer mode time refer to Program Mode B functions.

Max Ref Pad
Activates Maximum refrigerator mode setting refrigerator to coldest setting for 24 hours or until Max Ref Pad is pressed again.
1. Refrigerator indicator light will glow.
2. To adjust maximum refrigerator time refer to Mode B functions.

Alarm Off Pad
Turns off alarm signals. See Alarms section to interpret alarm signals.
1. Press and hold Alarm Off pad for 3 seconds to deactivate Door Open alarm. To reactivate Door Open alarm, press and hold Alarm Off pad for 3 seconds.
2. If Alarm Off pad is pressed and condition causing alarm is not corrected, alarm will reset.

Hidden Button
Activates Program Mode. See Program Mode section for description of functions available.
1. Open refrigerator door.
2. Press Display On pad.
3. Press hidden button pad.
4. Within 6 seconds press the following pads in this sequence: Max Ref, Max Frz, Max Ref, Max Frz.
5. Tone will sound 3 times and control will be in program mode A.

Display Off Pad
1. Deactivates control panel.
2. Deactivates temperature indication area of control panel.

Electronic Functional Description

Power Disconnect Switch
Use power disconnect switch to disconnect power without unplugging refrigerator. Power disconnect switch is located behind air grille on top right side. Refrigerator is shipped with power disconnect switch in the On position.

Showroom Switch
Showroom switch allows electronic controls and interior lights to function independently of refrigeration system. Showroom switch is located behind air grill to right of control panel. Refrigerator is shopped with showroom switch in unit run position.

Alarms

Power Up Alarm
After power is initially plugged in, after a power loss, or if power switch is turned off, all temperature

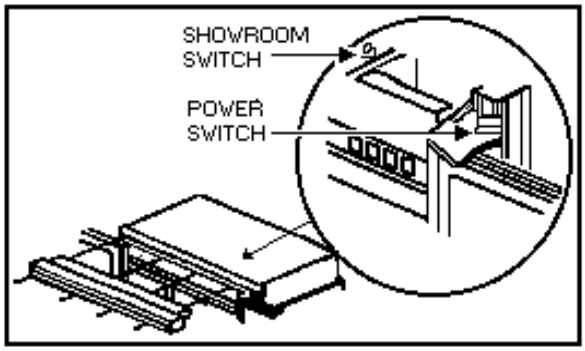

indicator lights will flash until Alarm Off or Display On is pressed.
Note: All settings return to default factory settings.

Door Open Alarm
Alarm tone sounds and indicator lights blink if either refrigerator or freezer door is open more than 3 minutes.
1. Turn off Door Open alarm by pressing Alarm Off pad or by closing door.
2. Deactivate door open alarm by pressing Display On pad and then press and hold Alarm Off pad for 3 seconds.
3. Door alarm delay can be adjusted in Program Mode B.

High Temperature Alarm
Alarm sounds and indicator light shows if freezer or refrigerator temperature has gone above critical level and remained warm for 2 hours. Alarm tone stops if temperature falls again.

Electronic Functional Description (con't)

1. Critical temperature for freezer is +15° F; for refrigerator critical temperature is +60° F.
2. Press Alarm Off pad to turn off alarm.

Thermistor Alarm
Alarm sounds and freezer or refrigerator indicator light shows and temperature indicators 4 through 7 will turn on in sequence if either thermistor circuit opens. Refer to Temperature Control Operation Section and Electronic Testing Section.
1. Press Alarm Off pad to turn off alarm.
2. Alarm will retest for normal operation. If condition has not been corrected, alarm will sound again.

Temperature Control Operation
For any temperature setting, outputs will be turned off/on based on cut-in/cut-out temperature determined by resistance levels of freezer and refrigerator thermistors.

Refrigerator and Freezer Thermistor

Temp °F (C)	Resistance Ohms	Temp °F (C)	Resistance Ohms
-20 (-29)	495600	36 (2)	87510
-15 (-26)	418200	38 (3)	82740
- 9 (-23)	354000	39 (4)	78300
-6 (-21)	300600	43 (6)	74100
-4 (-18)	256200	45 (7)	70170
5 (-15)	218850	46 (8)	66450
10 (-12)	187470	48 (9)	62970
16 (-9)	161040	50 (10)	59670
19 (-7)	138690	55 (13)	52290
25 (-4)	119760	61 (16)	45900
30 (-1)	103680	64 (18)	40410
32 (0)	97920	70 (21)	36540
34 (1)	92550	77 (25)	30000

As temperature decreases, resistance increases.
As temperature increases, resistance decreases.

Open thermistor or thermistor circuit will result in failure of refrigerator to cool.

Shorted thermistor will cause refrigerator to run 100 percent of time except for defrost cycle.

- Freezer temperature setting and thermistor value will determine if compressor/condenser fan and evaporator fan switches are open or closed. Compressor/condenser fan switch must be open for 6 minutes before switch can close again (compressor dwell time).
- Refrigerator temperature setting and thermistor value will determine if fresh food fan switch is open or closed.
- Cut-out and cut-in temperature values must be reached and maintained for 15 seconds before output state will change (digital delay).
- Refrigerator and freezer control calibration can be adjusted in Program Mode B.

Factory set freezer and refrigerator settings

Frozen Food		Fresh Food		Level
Cut-Out °F (C) +1.5	Cut-in °F (C) +1.5	Cut-Out °F (C) +1.5	Cut-in °F (C) +1.5	
-10 (-23)	2 (-17)	29 (-2)	34 (1.1)	9
-8 (-22)	4 (-16)	31 (-0.6)	36 (2,2)	8
-6 (-21)	6 (-14)	33 (-0.6)	38 (3.3)	7
-5 (-21)	7 (-14)	34 (1)	39 (3.9)	6
-4 (-20)	8 (-13)	35 (2)	40 (4.4)	5
-3 (-19)	9 (-13)	36 (2)	41 (5)	4
-2 (-19)	10 (-12)	37 (3)	42 (5.5)	3
0 (-18)	12 (-11)	39 (4)	44 (6.6)	2
2 (-17)	14 (-10)	41 (5)	46 (7.7)	1
-10 (-23)	2 (-17)	----	----	Max Ref
----	----	29 (-2)	44 (6.6)	Max Frz

Electronic Functional Description (con't)

Adaptive Defrost Operation (CRTD-Continuous Run Time Defrost)

Defrost occurs after predetermined length of compressor run hours. Compressor run time between defrosts changes, or adapts, depending upon recent history of defrost lengths (time it takes for defrost terminator to open after defrost heater has been turned on).

- Defrost terminator opens at 55° F (13° C) and closes at 20° F (-7° C).
- Compressor run time between defrost (CRTD) will be one of 3 values under normal operation: CRTD 1 (8 hours) or CRTD 2 (12 hours) or CRTD 3 (16 hours).

  If defrost length is low (DT-LO defined as 21 minutes) indicating small frost load, CRTD for next defrost cycle is advanced to next level.

  If defrost length is high (DI-HI defined as 24 minutes) indicating large frost load, CRTD for next defrost cycle is lowered to next level.

  If defrost length is between 21 and 24 minutes, CRTD for next defrost cycle remains the same.

  Initial value at power up CRTD 0 is 4 hours.

- Hidden Button Mode CRTD equals 96 hours. Hidden Button Mode CRTD is interrupted with door openings. Defrost interval will revert back to interval before Hidden Button Mode. Three things must occur to reach Hidden Button Mode CRTD:
  1. Defrost interval must be CRTD 3 (16 hours).
  2. Both refrigerator and freezer doors must have remained closed since last defrost cycle.
  3. Defrost thermostat must have opened in less than 21 minutes during last defrost cycle.
- Six minutes dwell time occurs after defrost terminator opens before compressor and condenser fan motor will operate. Ten minute dwell time occurs after defrost terminator opens before evaporator fan motor will operate. Dwell time can be bypassed by disconnecting power to the unit for 30 seconds.
- Conventional defrost can be selected in Program Mode B.

PROGRAM MODE

Accessing Program Mode

Two programming modes are available. Mode A allows
reading refrigerator and freezer thermistor temperatures. Mode B is used for all odther programmable functions.

1. Open refrigerator door.
2. Press Display On pad.
3. Press Hidden Button pad.
4. Press the following sequence of pads within 6 seconds; Max Ref, Max Frz, Max Ref, Max frz.\
5. When access is granted, tone will sound three times and control will be in Program Mode A. unmarked indicator light will illuminate.
6. Toggle to Program Mode B be pressing Display On pad. Unmarked indicator light is off.

EEPRM Update in Control Memory

EEPRM is permanent programmable memory of the control pane..

- Entry tone, door audio alarm and status are stored in EEPRM after control panel is deactivated.
- Information stored in EEPRM memory is not affected by power loss.

Mode A Functions

Reading Temperature Display

Temperature display will show thermistor temperature in binary coded decimal format (BCD). Indicator lights 1 through 4 represent the tens digit with 1 being the most significant bit. Indicator lights 5 through 8 represent ones digit with 5 being the most significant bit. Positive and negative are shown be indicator light 9; light glows to show negative value.

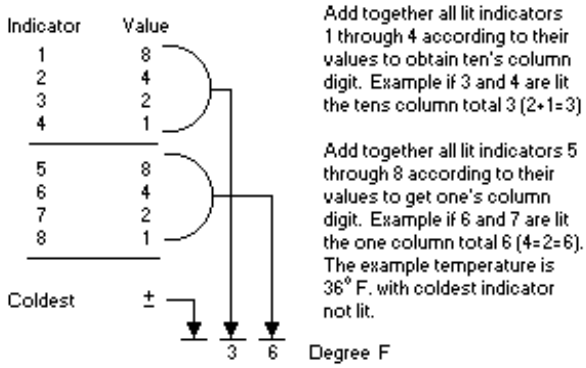

Mode A Functions (con't)

Freezer Thermistor Temperature
1. Choose freezer thermistor temperature display by pressing Freezer Temp pad.
2. Freezer thermistor temperature displays.

Refrigerator Thermistor Temperature
1. Choose Refrigerator Thermistor temperature display by pressing Ref Temp pad.
2. Refrigerator thermistor temperature displays.

Mode B Functions

Automatic Keyboard Functions
Activate and deactivate keyboard by toggling Display Off pad. If high temperature indicator glows, keyboard will disable after 10 minutes. If high temperature indicator is off, keyboard is always enabled. DO NOT LEAVE KEYBOARD IN ENABLED MODE AFTER PROGRAMMING IS COMPLETE

Door Alarm Delay
1. Press Alarm Off pad. Door open indicator will glow. One temperature indicator should glow indicating present delay setting in minutes (indicator 1 means 1 minute, 2 means 2 minutes, etc.) Default delay is 3 minutes.
2. Press Higher Temp pad to decrease delay by 1 minute.
3. Press Lower Temp pad to increase delay by 1 minute.

Max Ref Run Time Duration
1. Press Max Ref pad. Max Ref light will glow. One temperature indicator should glow indicating present Max Ref run time duration in 2 hour increments (indicator 1 means 2 hours, 2 means 4 hours, etc.) Default delay is 10 hours.
2. Press Higher Temp pad to decrease Max Ref duration by 2 hours.
3. Press Lower Temp pad to increase Max Ref duration by 2 hours.

Max Frz Run Time Duration
1. Press Max Frz pad. Max Fra light will glow. One temperature indicator should glow indicating present Max Frz run time duration in 4 hours increments (indicator 1 means 4 hours, 2 means 8 hours, etc.) Default delay is 24 hours.
2. Press Higher Temp pad to decrease Max Frz duration by 4 hours.
3. Press Lower Temp pad to increase Max Frz duration by 4 hours.

Temperature Offset Calibration
Offset amount adjusts temperatures for refrigerator cut-ins and cut-outs by the amount of offset. The chart below shows the indicator and the amount of offset from the factory default setting.

INDICATOR	OFFSET
1	+8
2	+6
3	+4
4	+2
5	0
6	-2
7	-4
8	-6
Coldest	-8

- Setting Refrigerator Temperature Offset
  Press Ref Temp pad. Refrigerator indicator and one indicator will glow. Press Higher Temp pad to move offset to the next warmer setting. Press Lower Temp pad to move offset to the next colder setting. Factory default refrigerator offset is –4.
- Setting Freezer Temperature Offset

  Press Freezer Temp pad. Freezer temperature indicator and one indicator will glow. Press Higher Temp pad to move offset to the next warmer setting. Press Lower Temp pad to move offset to the next colder setting. Factory default freezer offset is 0.

Defrost Mode Selection
Toggle Hidden Button pad to select adaptive or conventional defrost mode. Hidden Button indicator glows when adaptive defrost has been selected. If Hidden Button indicator is off, conventional defrost is selected. Conventional defrost uses 8 hour CRTD value.

Forced Defrost
Defrost can be forced to start by pressing and holding the Alarm Off pad for 3 seconds. Program changes will be saved permanently in EEPROM and program mode will exit to Run Mode.

Forced Pull Down
Compressor start can be forced by pressing and holding Max Frz pad for 3 seconds. Program changes will be saved permanently in EEPROM. Compressor, evaporator fan and condenser fan will come on.

Exiting Program Mode
Press Display On pad for 3 seconds to exit Program Mode. Tone will sound three times. Changes made in Program Mode will be permanently saved in EEPROM.

Note: If no pad is pressed for 10 minutes, Program Mode will be automatically exited. However, no changes will be saved if Program Mode exits automatically.

Electronic Testing

Electronic Testing Mode

Forced Defrost Start
1. Press Display On pad to activate control panel.
2. Simultaneously press and hold Max Ref and Display Off pads for 3 seconds.

Forced Compressor Start
1. Press Display On pad to activate control panel.
2. Simultaneously press and hold Max Frz pad and Display Off pad for 3 seconds.

Open Thermistor Detect
Alarm sounds and freezer or refrigerator indicator light shows and temperature indicators 4 through 7 will turn on in sequence if either thermistor circuit opens. Refer to Temperature Control Operation Section and Electronic Testing Section.
1. Press Alarm Off pad to turn off alarm.
2. Alarm will reset for normal operation. If condition has not been corrected, alarm will sound again.

High Voltage Board Check Points

WARNING

To avoid electrical shock which can cause severe personal injury or death, disconnect power to refrigerator using power switch before servicing. Wires removed during disassembly must be replaced on proper terminals to insure correct earth ground and polarization. After servicing, reconnect power using power switch.

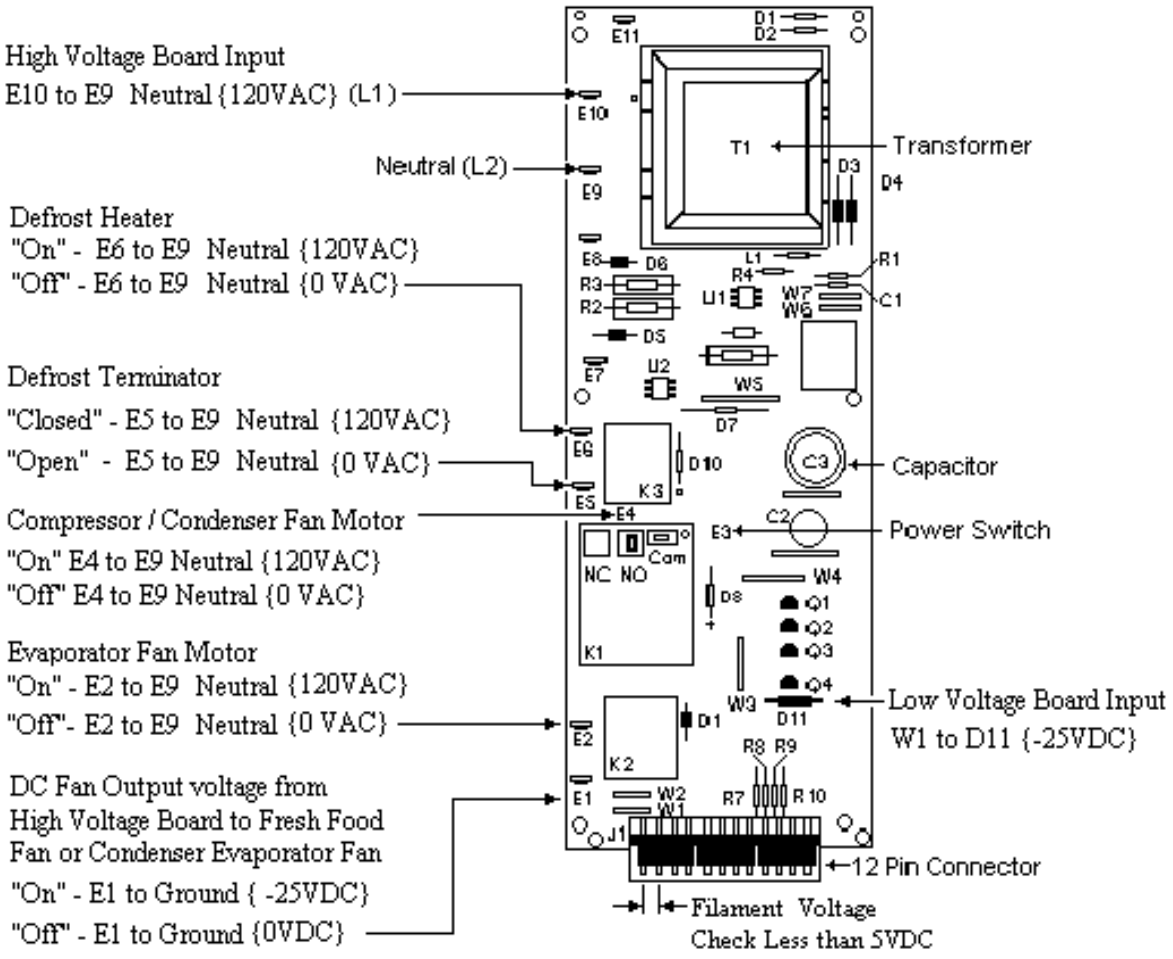

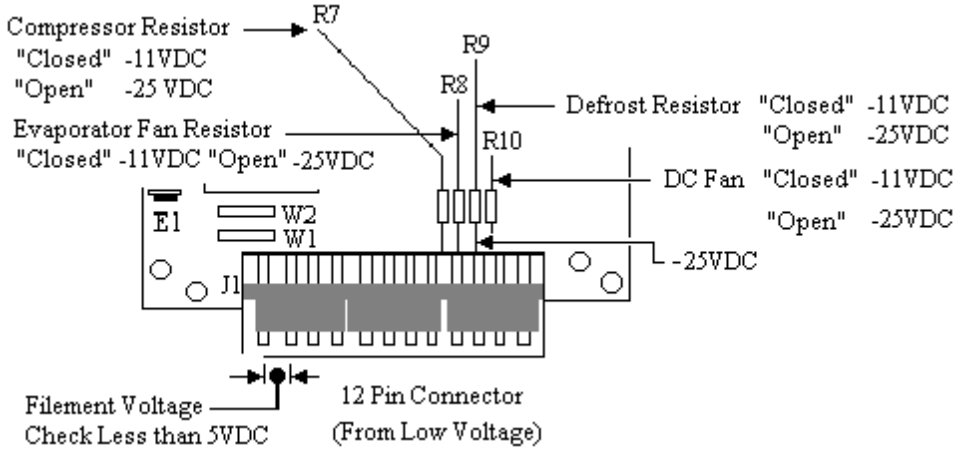

High Voltage Board Check Points

WARNING
To avoid electrical shock which can cause severe personal injury or death, disconnect power to refrigerator using power switch before servicing. Wires removed during disassembly must be replaced on proper terminals to insure correct earth ground and polarization. After servicing, reconnect power using power switch.

Refrigeration and Defrost Component Checks Made at High Voltage Board

Low voltage board input	W1 to D11	approximately	-25VDC
	E10 to E9 (Neutral) or ground	approximately	120VAC
Compressor/condenser fan motor	"ON" = E4 to E9 (Neutral) or ground	approximately	120VAC
	"OFF" = E4 to E9 (Neutral) or ground		
Compressor/condenser fan motor relay	"CLOSED" = R7 to ground	approximately	-11VDC
	"OPEN" = R7 to ground	approximately	-25VDC
Evaporator fan motor relay	"CLOSED" = R8 to ground	approximately	-11VDC
	"OPEN" = R8 to ground	approximately	-25VDC
Evaporator fan motor	"ON" =E2 (Neutral) or ground	approximately	120VAC
	"OFF" = E2 (Neutral) or ground		0VAC
Defrost heater	"ON" = E6 to E9 (Neutral) or ground	approximately	120VAC
	"OFF" = E6 to E9 (Neutral) or ground		0VAC
Defrost heater relay	"CLOSED" = R9 to ground	approximately	-11VDC
	" OPEN" = R9 to ground	approximately	-25VDC
Defrost terminator	"CLOSED" =E5 to E9 (Neutral) ground	approximately	120VAC
	"OPEN" = E5 to E9 (Neutral) or ground		0VAC
DC fan output voltage from high voltage board to fresh food fan or condensate evaporator fan	"ON' = E1 to ground	approximately	-25VDC
	"OFF" = E1 to ground		0VDC
DC fan input voltage signal to high voltage board from low voltage board for fresh food fan and for condensate evaporator fan	"ON" =R10 to ground	approximately	-11VDC
	"OFF" = R10 to ground	approximately	-25VDC

Filament voltage at pin 11 and 12 = less than 5VDC

NOTE: DC voltages are read from side of resistor which is closest to the 12 pin connector.

Wiring Schematic

WARNING

To avoid electrical shock which can cause severe personal injury or death, disconnect power to refrigerator using power switch before servicing. Wires removed during disassembly must be replaced on proper terminals to insure correct earth ground and polarization. After servicing, reconnect power using power switch.

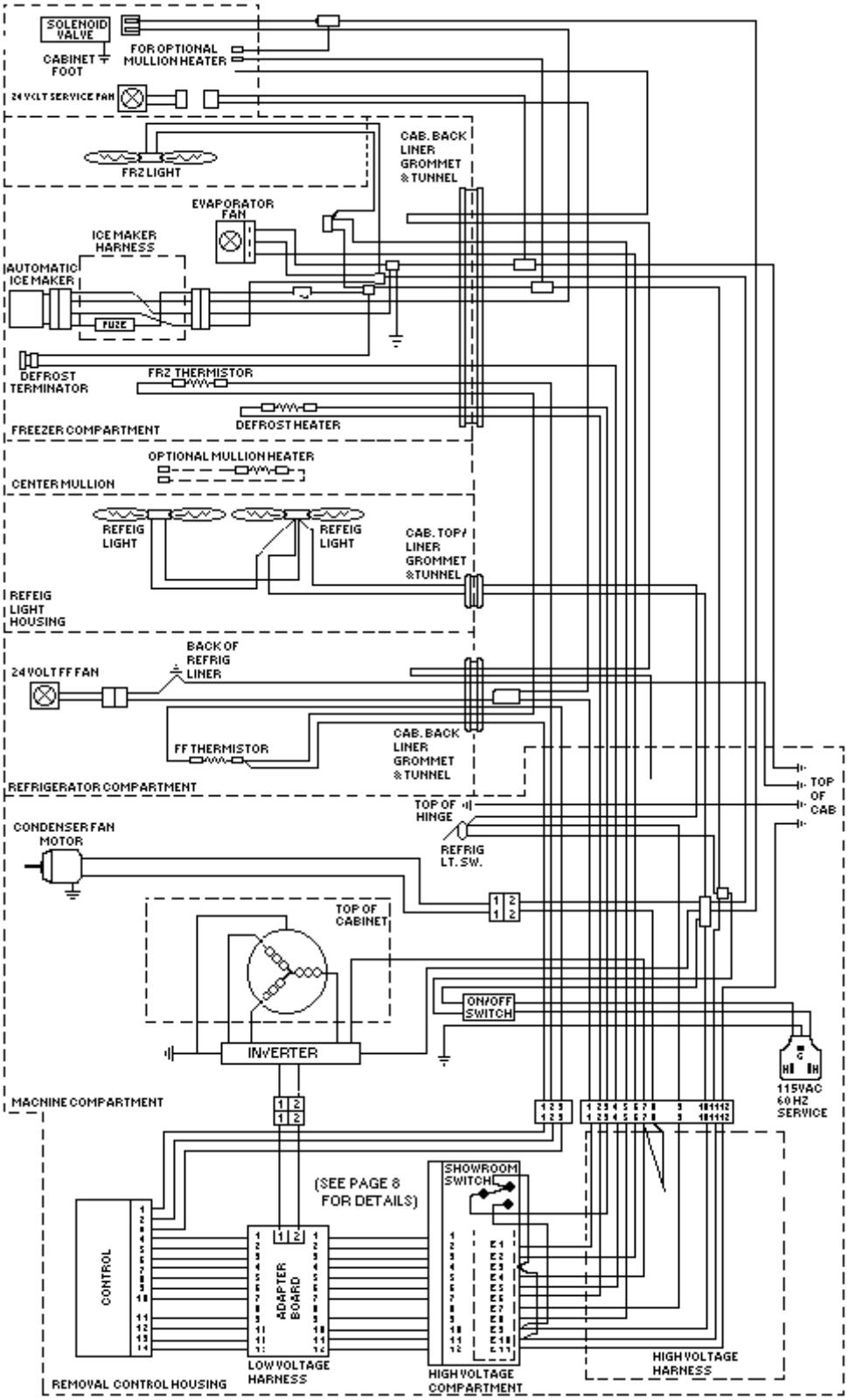

VARIABLE CAPACITY COMPRESSOR (VCC)

CONTROL UNIT

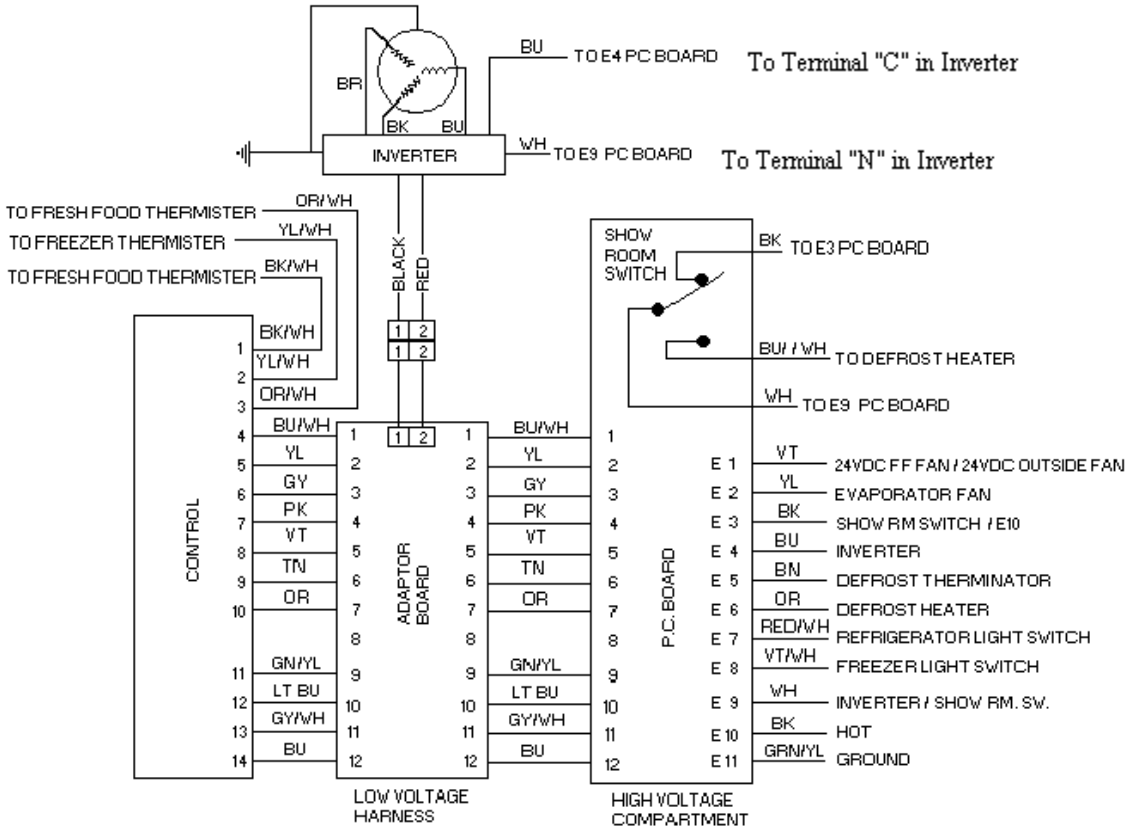

The adapter board sends a frequency signal to the inverter. Typically the adapter board will send a 3mA current and 5VDC (square wave) signal. The frequency can be checked with a Fluke meter that reads frequency. There is a self check provision on the adapter board that occurs during the first 45 seconds after the refrigerator is powered up. If you remove the frequency wire from the inverter (going to the control housing), you can probe the pins with the Fluke meter. With the probes from the Fluke meter (making sure the meter is in the frequency mode) on the pins from the adapter board wiring harness, power up the refrigerator. The meter should see the two frequencies called out in the Adapter board drawing. The frequencies will fluctuate every 15 seconds until the time reaches 45 seconds (15, 30, 45 sec.) The frequencies are listed on the adaptor board drawing and the compressor drawing. The adapter board sends two separate frequencies depending on several factors. At startup or after power restoration the adapter board sends the inverter the high frequency signal until the first defrost. After the first defrost, it sends the lower frequency signal. The adaptor board will also go into the higher frequency under two other conditions, if the runtime (called the Runtime High Trigger) reaches a specific time or if the duty cycle reaches a specific %. The adapter board will resort back to the lower frequency in both cases when the Duty Cycle drops below a specific %.

Speed Control Interface

1. Position:

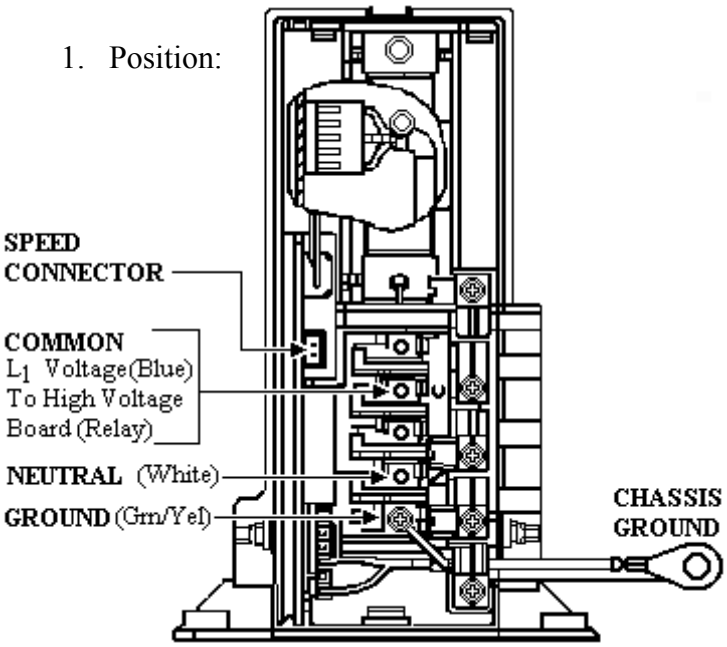

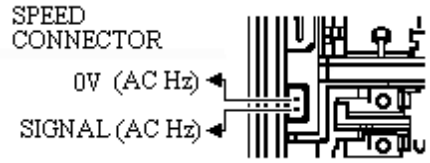

2. Circuit:

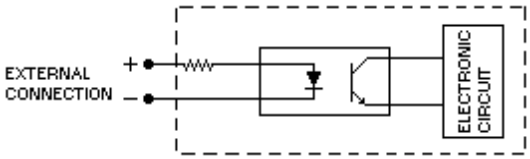

3. The microcomputer will wait for a speed information in order to start.

4. The speed signal wave form (continuous pulse train) shall be as follows:

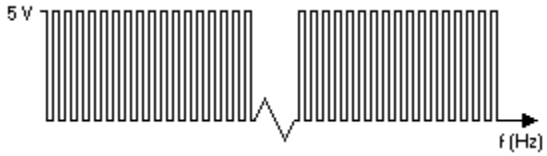

5. The maximum and minimum rating for speed input signals are:

INPUT VOLTAGE	SYMBOL	Min	Type	Max	Unit
HIGH	Vhigh	4.5	5.0	5.5	V
LOW	Vlow	-0.2	0	0.2	V
REVERSE VOLTAGE	VR			6	V
ISOLATION VOLTAGE (AC for 1 min.)	Viso			5	V
FORWARD CURRENT	IF	3	5	10	mA
REVERSE CURRENT	IR			10	µA

The pulse frequency (edge sensitive, duty cycle from 10 to 90% is OK) will determine the motor speed as shown in the curve below:

6. Minimum speed 1600RPM -- Maximum speed 4500 RPM
7. If the inverter does not receive the speed signal for more than 33 shaft turns, the motor stops.

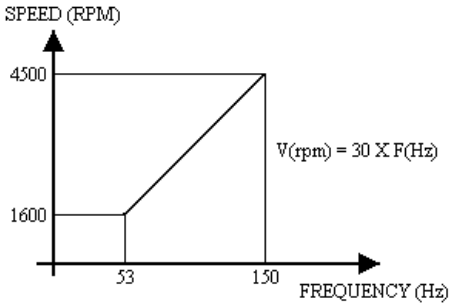

Example

FREQUENCY Hz	SPEED RPM
53	1600
83	2500
100	3000
117	3500
150	4500

WARNING

To avoid electrical shock which can cause severe personal injury or death, disconnect power to refrigerator using power switch before servicing. Wires removed during disassembly must be replaced on proper terminals to insure correct earth ground and polarization. After servicing, reconnect power using power switch.

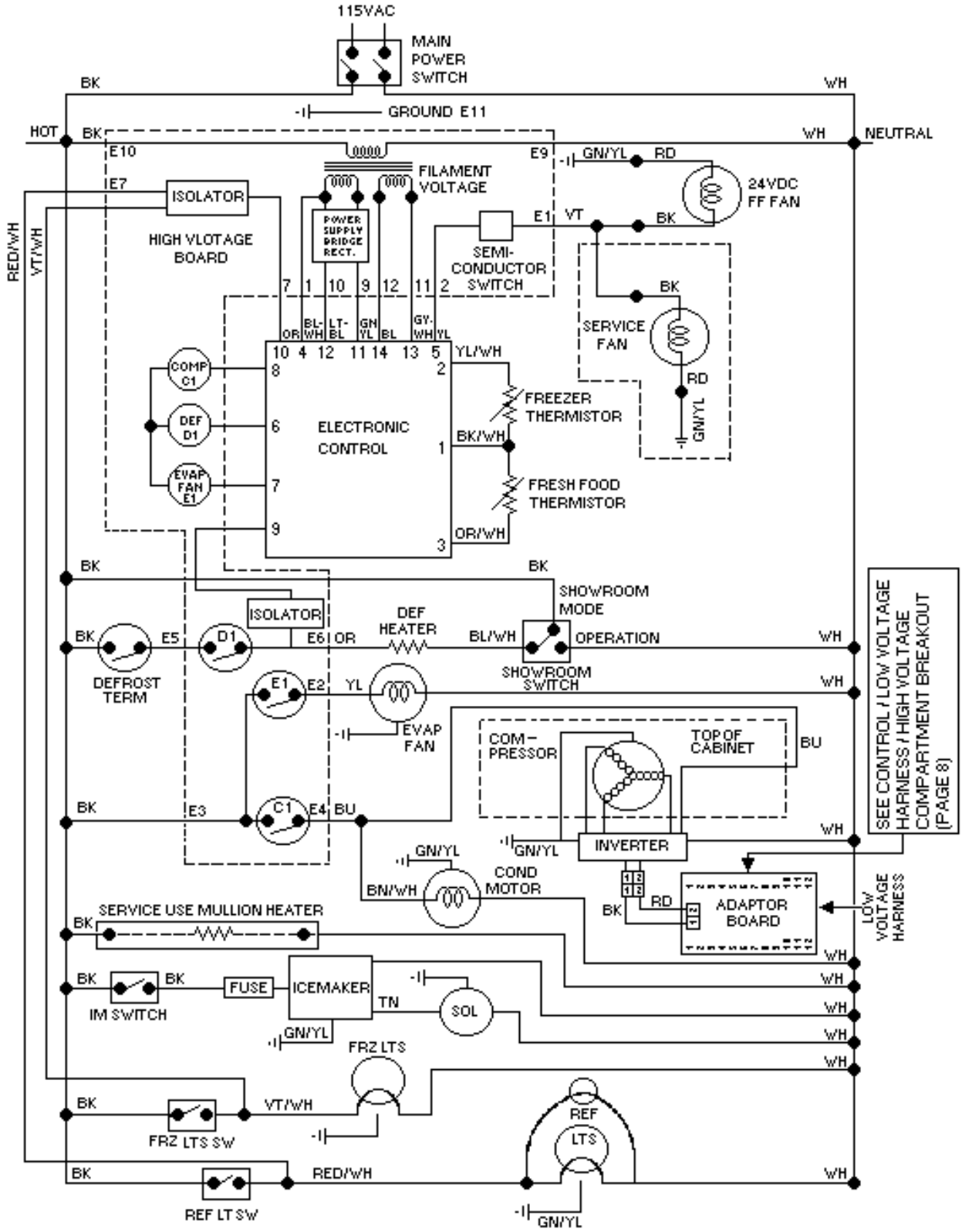

Freezer Compartment Theory of Operation

WARNING

To avoid electrical shock which can cause severe personal injury or death, disconnect power to refrigerator using power switch before servicing. Wires removed during disassembly must be replaced on proper terminals to insure correct earth ground and polarization. After servicing, reconnect power using power switch.

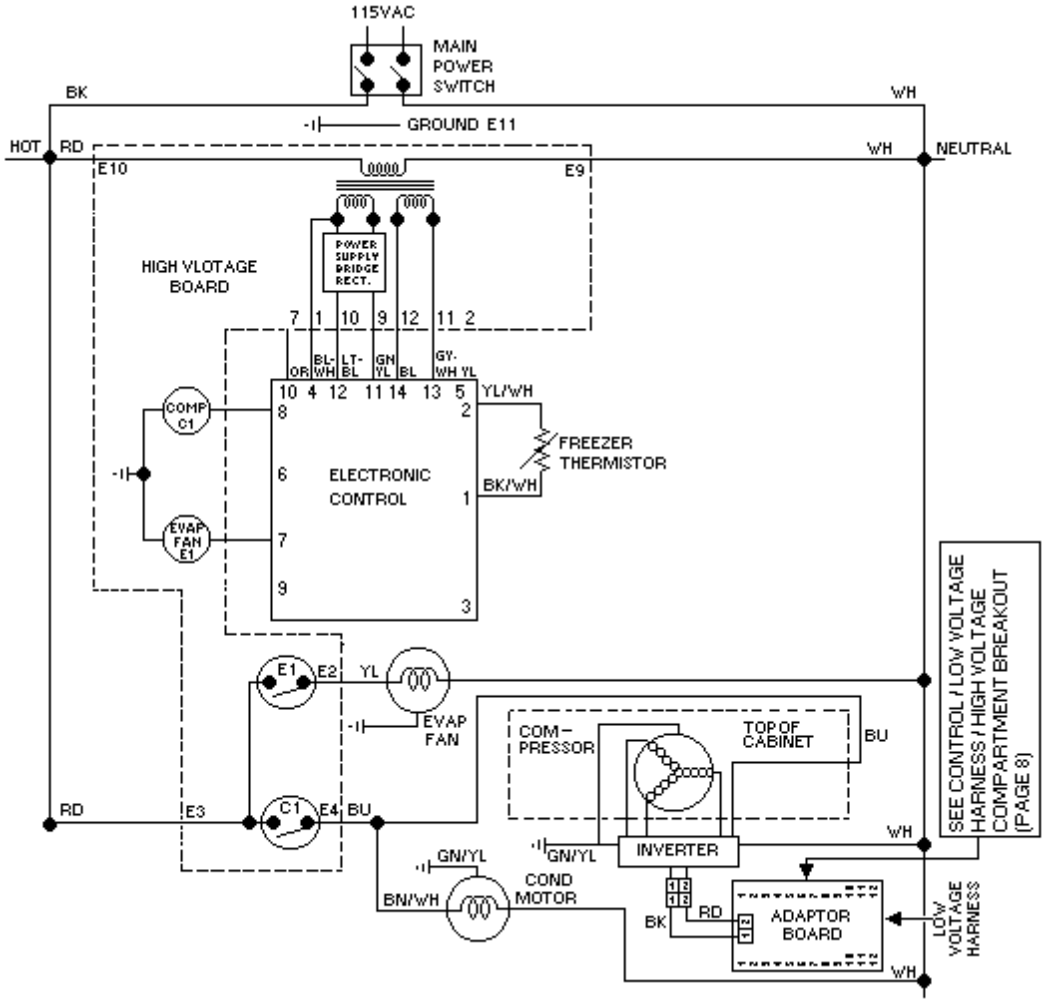

As a freezer thermistor warms, the resistance decreases allowing low voltage signal to be sent to electronic control. Electronic control sends two low voltage signals, one to the compressor relay coil (C1) and one to the evaporator relay coil (E1).

When both relay coils are energized and both relay contacts are closed, high voltage circuits to evaporator fan motor, compressor, and compressor fan motors are complete. *The adaptor board then sends a 3mA, 5VDC square wave frequency to the inverter. This frequency corresponds to a specified speed (rpm) in which the compressor motor will run. The frequency sent can be either the high speed frequency or the energy speed frequency. These values are indicated on page 5 in this document.*

As thermistor cools during refrigeration cycle, resistance through thermistor increases blocking low voltage signal to electronic control interrupting circuit.

Refrigeration Compartment Theory of Operation

WARNING

To avoid electrical shock which can cause severe personal injury or death, disconnect power to refrigerator using power switch before servicing. Wires removed during disassembly must be replaced on proper terminals to insure correct earth ground and polarization. After servicing, reconnect power using power switch.

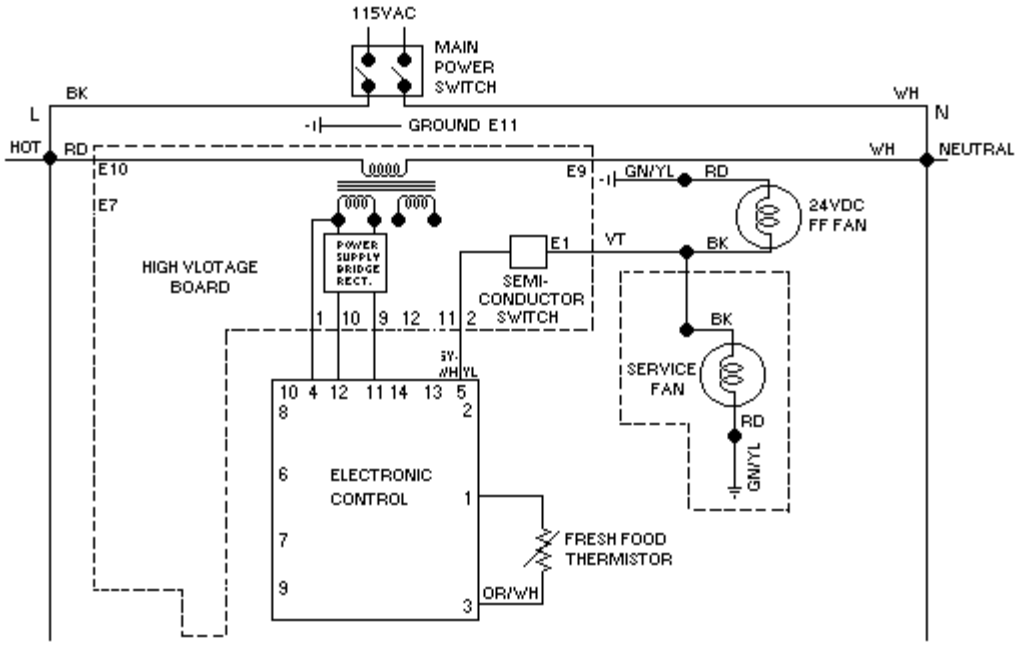

If both freezer and fresh food thermistors are warm, their resistance drop (see table Refrigeration and Freezer Thermistor in Temperature Control Section) and the electronic signals are sent to initiate operation of the evaporator fan motor, compressor, and condenser fan motor and for operation of the fresh food fans. Once the signal is sent for operation of the compressor, the adapter board sends a 3mA, 5VDC square wave frequency signal to the inverter in order to start the compressor motor at the specified speed (See table on page 5 in this document for appropriate values).

As the fresh food thermistor warms, resistance decreases allowing low voltage signal to be sent to the electronic control. The electronic control sends a low voltage signal to semiconductor switch for DC fresh food fan to begin operating. The fresh food fan then circulates freezer air into fresh food compartment.

As the fresh food thermistor cools, the resistance increases. The increased resistance blocks low voltage signal to electronic control, interrupting circuit to DC fresh food fan.

Refrigeration and Freezer Compartment Theory of Operation

WARNING

To avoid electrical shock which can cause severe personal injury or death, disconnect power to refrigerator using power switch before servicing. Wires removed during disassembly must be replaced on proper terminals to insure correct earth ground and polarization. After servicing, reconnect power using power switch.

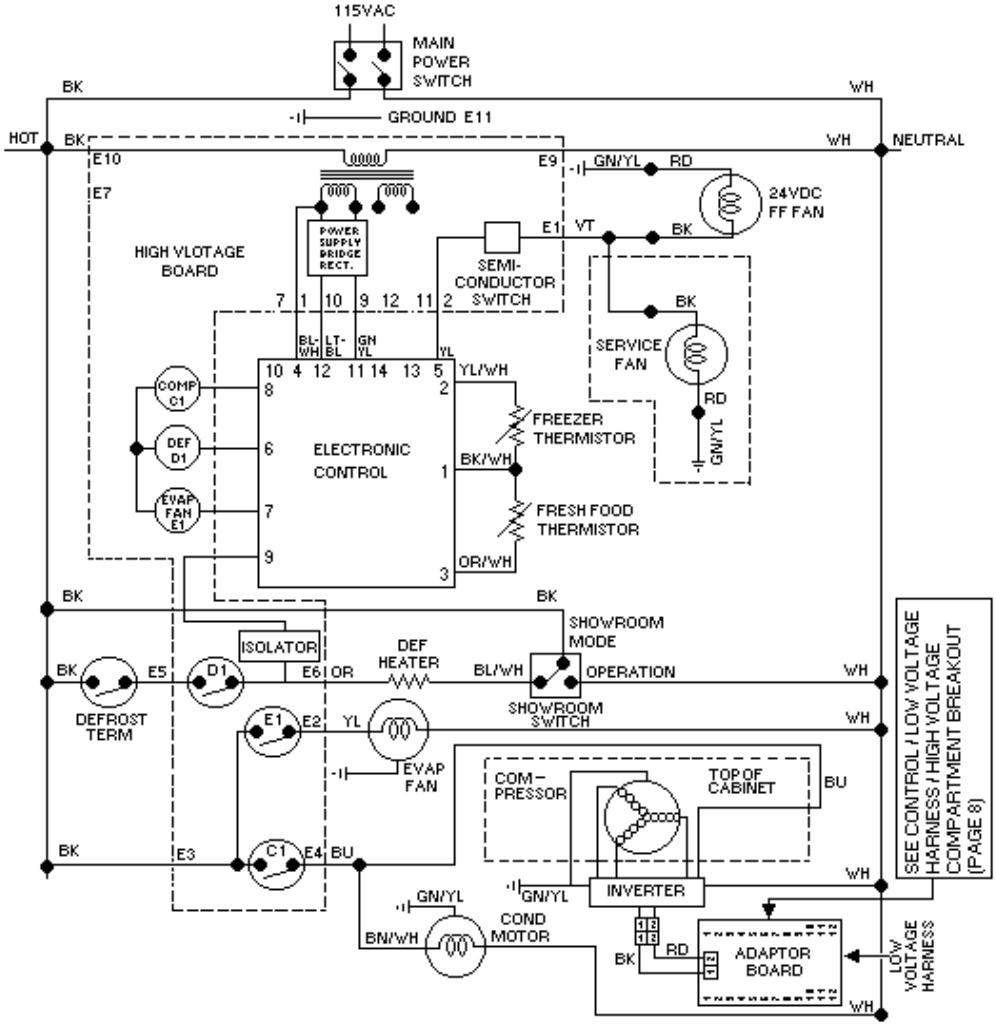

If both freezer and fresh food thermistors are warm, their resistance drops (see table Refrigerator and Freezer Thermistor in Temperature Control Section) and the electronic signals for compressor / condenser fan motor operation and for operation of fresh food fan. (See previous section on Freezer and Refrigeration Compartment Theory of Operation for adapter board control.)

After freezer thermistor cools sufficiently to raise resistance and block the signal to the electronic control, compressor / condenser fan motor will shut off.

However, fresh food fan will continue to run until fresh food thermistor cools and signal is blocked to electronic control.

If fresh food thermistor cools before freezer thermistor, electronic control will interrupt circuit to fresh food fan while evaporator fan motor will continue to operate under control of freezer-thermistor.

Adaptive Defrost Theory of Operation

WARNING

To avoid electrical shock which can cause severe personal injury or death, disconnect power to refrigerator using power switch before servicing. Wires removed during disassembly must be replaced on proper terminals to insure correct earth ground and polarization. After servicing, reconnect power using power switch.

IMPORTANT: when the showroom switch is OFF, the isolator sees line voltage which keeps the electronic controller from signaling the evaporator fan motor or compressor relay coils and keeps the fresh food fan off.

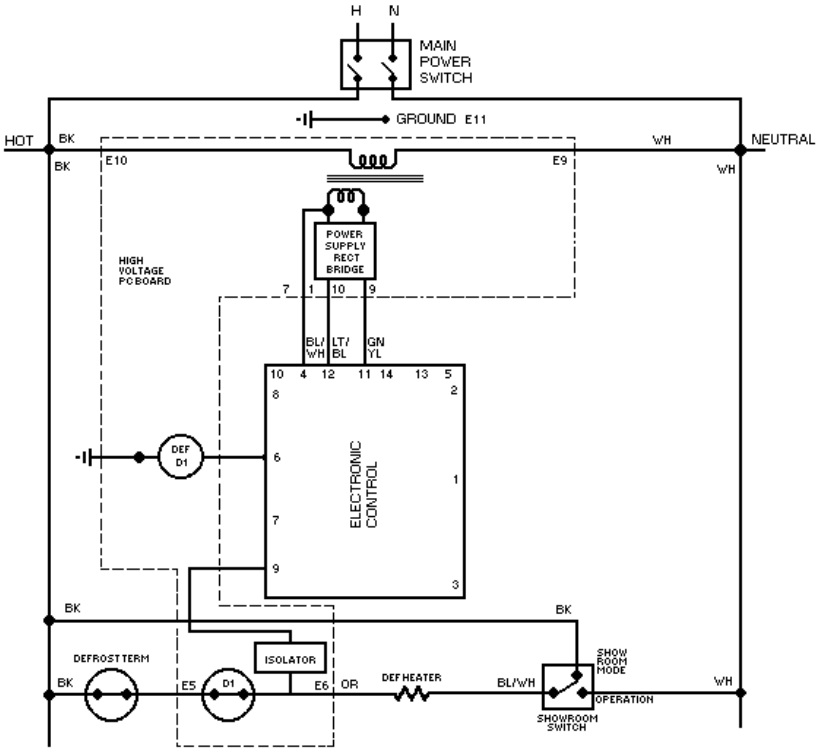

After designated compressor run time, refrigeration cycle is interrupted and electronic control sends a low voltage signal to defrost relay coil (def D1).

Powering the relay coil closes contact (D1) completing high voltage circuit to defrost heater through closed defrost terminator (closes at 15°F).

Isolator, which is part of high voltage PC board, recognizes presence of line voltage to defrost heater and sends low voltage signal to electronic control.

Electronic control keeps count of number of minutes defrost terminator remains closed (opens at 48°F).

Length of time defrost terminator is closed determines if the next defrost cycle advances by 4 hours of compressor run, stays at the same interval, or delays be 4 hours of compressor run.

If defrost terminator does not open before 29 minutes, defrost cycle is automatically terminated by electronic control and refrigeration cycles will resume after 6 minutes dwell time.

TERMINAL BOARD

The electrical diagram in figure 1 represents the most typical connections with the use of a terminal board.

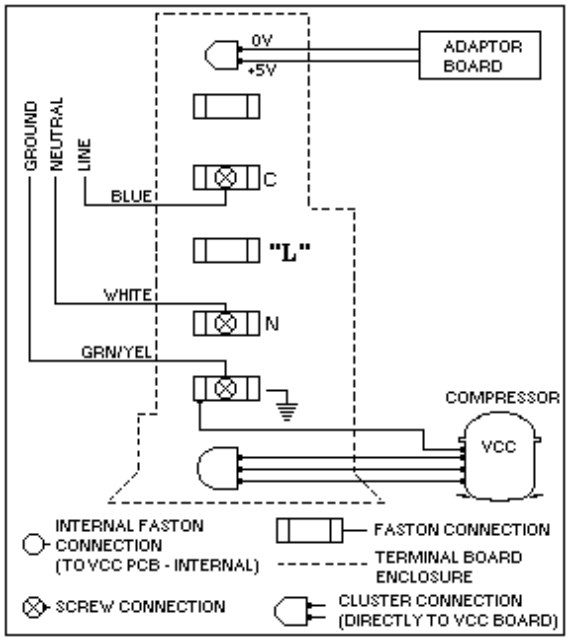

FIG. 1

STARTING PROCEDURES

Once all due electrical connections are made and the compressor is properly assembled to the refrigeration system, the compressor will start if AC voltage is supplied to the inverter. The following steps take part during the start procedure:

a) After the connection to the supply AC line (or switch on of thermostat) the inverter will spend 6 seconds of waiting time for the first try. The inverter will also stand by for 6 seconds after each failed attempt (if any).
b) After the 6 seconds delay, the inverter will position the rotor.
c) Immediately after positioning the rotor, the compressor will start and accelerate to the pre-selected speed entering the normal operation mode.
d) In the occurance of a failed start, a limit of 12 consecutive tries will be made until the inverter will assume a waiting condition depending on the software version installed (this situation may be encountered if there is no equalized pressure between suction and discharge sides in the refrigerating system). The inverter will also assume a waiting condition if hardware defects are detected before the first try.
e) If power is switched off during the starting procedure, the inverter will self reset when the power is recovered.
f) A “watch dog” routine running at all times will reset the inverter in case strong line or control signal disturbance occurs.

NORMAL OPERATION MODE

After a normal starting, the compressor will run under the desired speed dictated by the speed control signal input.

During this phase, the compressor speed will be monitored for each shaft turn and compared with the speed control signal information. If the compression load is too high for the selected speed, the compressor motor will be adjusted to work under a lower speed until the compressor is able to maintain a constant speed. If the load is too high so the compressor cannot be maintained at the lowest possible speed, then the compressor will be stopped.

At all times, a “watch dog” routine will reset the inverter in case it stops working properly. If power is switched off during the operation, the inverter will self reset when the power is recovered and begin a new starting procedure.

INVERTER SHUTDOWN

The compressor may only be switched off by cutting its power supply or by entering the due speed control input.

If the compressor is make to stop due to power supply switch off, then the inverter will self reset when the power is recovered and begin a new starting procedure.

If the inverter remains connected to AC line while the compressor is stopped, a stand by power consumption will be present in order to maintain the inverter in operation.

PROTECTIONS

The VCC compressor is electronically protected meaning that this function is performed by the inverter circuit during its operation. The compressor itself is not equipped with internal or external conventional overload protector (bimetallic). The following are the main built in protections and performed by the inverter.

a) LOW OR NO VOLTAGE – If the AC (supply) voltage drops below 85 VAC (as a general rule) the inverter will be automatically reset.

b) "WATCH DOG" – A "watch dog" routine running at all times will reset the inverter in case strong line or control signal disturbance occur. The "watch dog" function provides a hardware monitor over the software to avoid losing the program. All the signals that the microprocessor is receiving are monitored.

c) LOCKED ROTOR – In case the rotor is locked during the starting trial, the current output to the compressor is interrupted. In the occurrence of a failed start, a limit of 12 consecutive tries will be made until the inverter will assume a waiting condition depending on the software version installed (this situation may be encountered if there is no equalized pressure between suction and discharge sides in the refrigerating system.

d) HARDWARE CHECK –During the starting procedure and before applying current to the compressor motor, all power switches are checked for short circuit. If a malfunction is detected, the inverter will enter the waiting time mode.

e) OVERCURRENT PROTECTION – The inverter hardware is able to detect and react when the current overcomes a predefined limit of 3.3amps. In case the input current limit is reached, the motor current will be kept at this value.

f) OVERLOAD PROTECTION – If the load on the shaft of the compressor is increased for a given speed input, the current will be increased until its limit (3.3 A max) is reached. If the current is already at 3.3 Amps then the speed will be decreased until constant speed is achieved keeping the balance with the shaft load. If the load continues to increase the compressor will reduce its speed until the lowest speed limit. If the load is further increased then a stall condition is reached.

   In case the overload is kept for a long time, the power stage of the inverter may increase in temperature. This overheating is then sensed by a temperature sensor installed on the power switches heat sink that shuts down the inverter when over the limit of 90° C.

g) SPEED PROTECTION – Two operating limits are defined for the compressor operation: Min speed 1600 rpm (53 Hz) and Max speed of 4500 rpm (150 Hz).
   a. Minimum speed: if the speed signal requires operation under the speed limit than the compressor will stop.

b) Maximum speed: if the speed signal requires operation above the speed limit than the compressor will be kept running at the maximum speed.

h) SHORT CIRCUIT PROTECTON – In case short circuits, a current detection circuit will open the power switches (cutting the current) and avoiding further damage to power devices or compressor winding.

In case of a major failure in the hardware (short circuit of two or more power switches, a fuse will brake the current supplied to the inverter).

ADAPTER BOARD LOGIC FLOWCHART

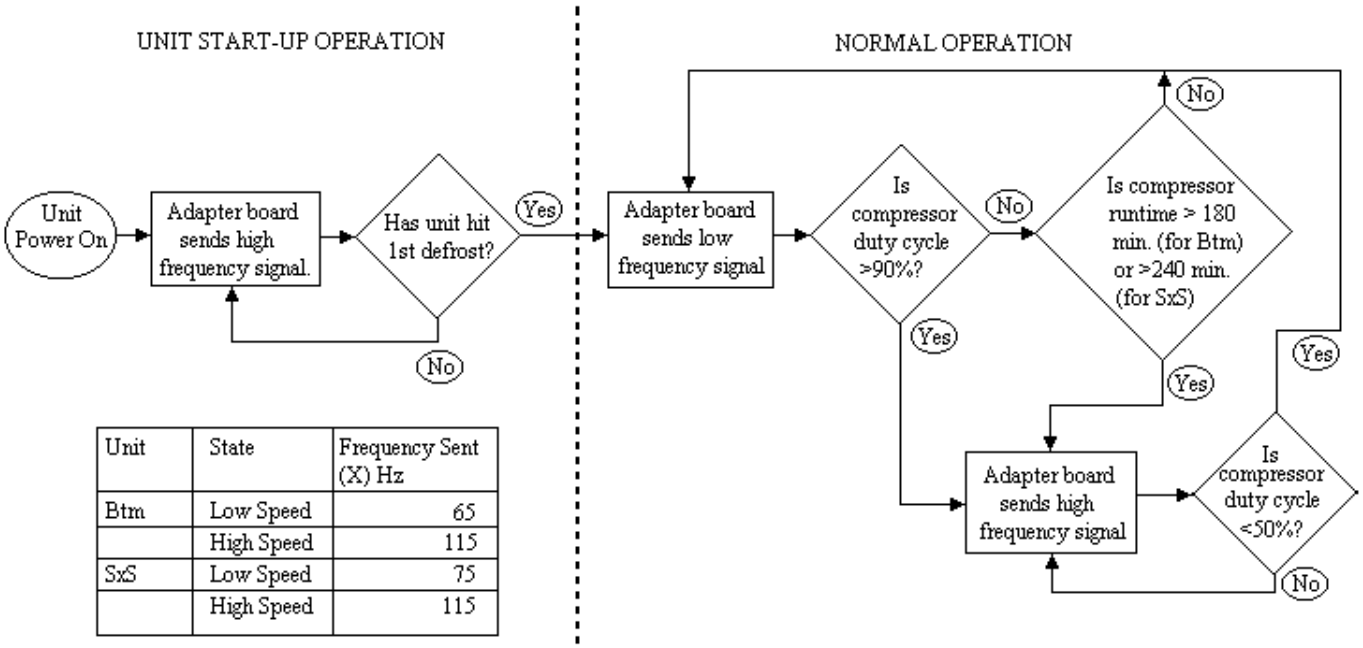

Unit	State	Frequency Sent (X) Hz
Btm	Low Speed	65
	High Speed	115
SxS	Low Speed	75
	High Speed	115

CONTROL BOARD OPERATION

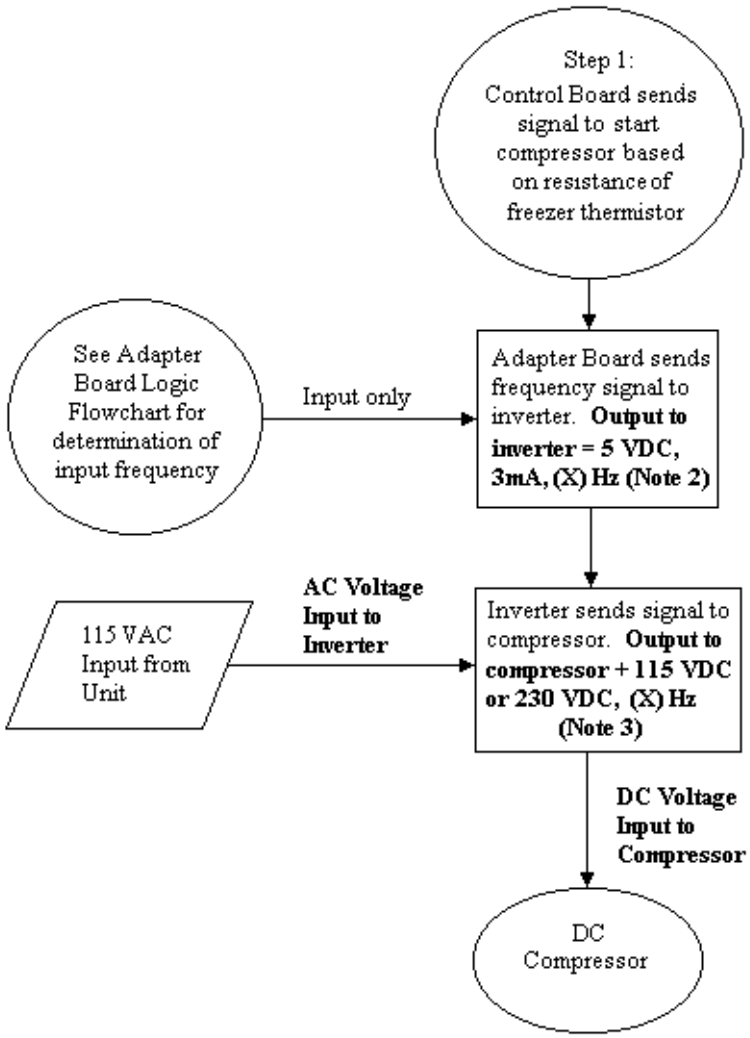

Unit	State	Frequency Sent (X) Hz (Note 1)
Btm	Low Speed	65
	High Speed	115
SxS	Low Speed	75
	High Speed	115

Note 1: Compressor speed (rpm) = (X) Hz *30

Note 2: The 5 VDC signal from the adapter board to the inverter is the driving potential for the frequency signal. It is not the voltage being sent to the compressor. The speed in which the compessor runs is dependent upon the frequency that is sent from the adapter board.

Note 3: Embraco inverter uses a voltage doubler during speeds >2250 rpm to increase the effeciency at high speeds. If the voltage doubler is off, the inverter sends 115 VDC to the compressor. If the vlotage doubler is on, the inverter sends 230 VDC to the compressor.

TROUBLESHOOTING

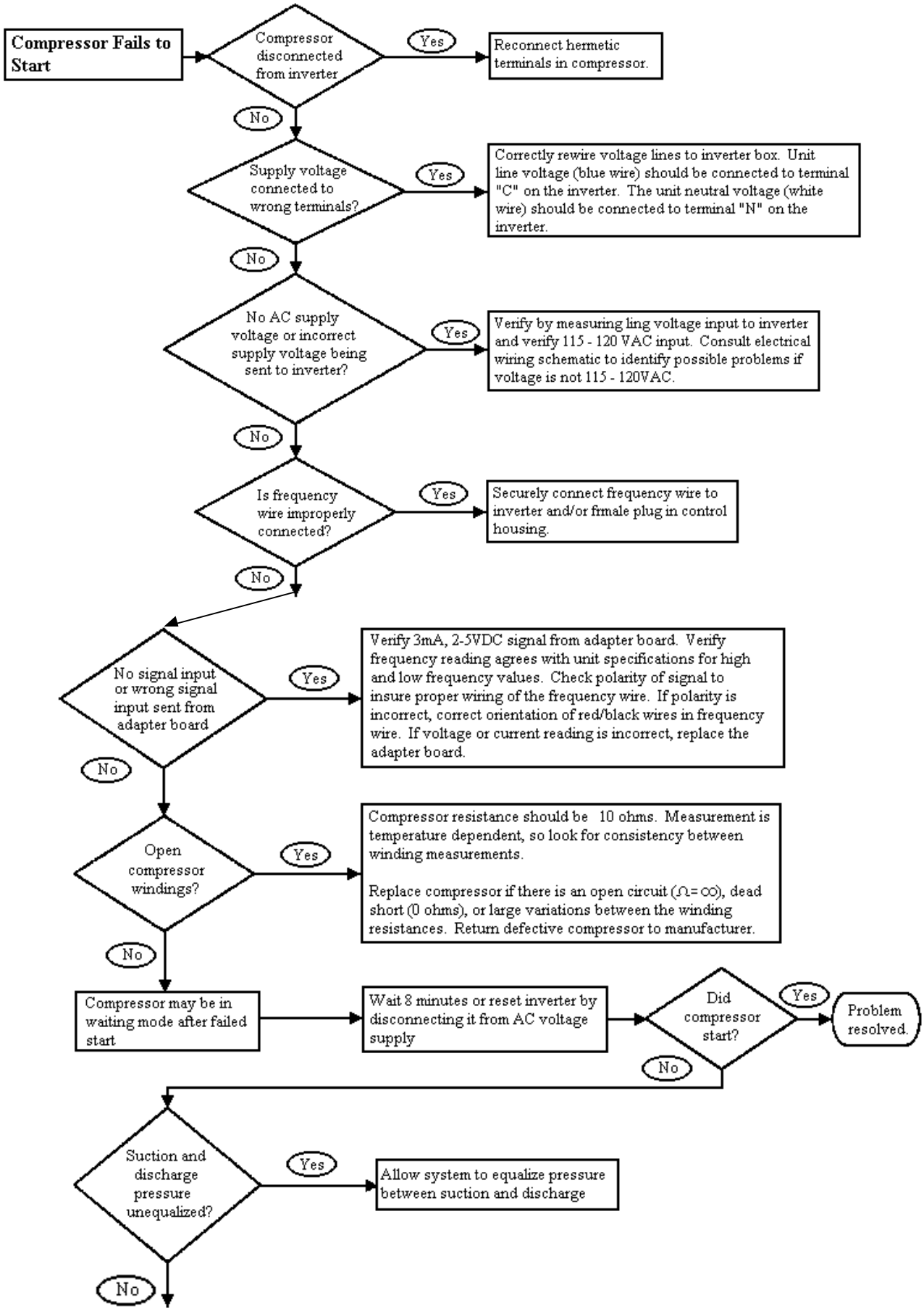

TROUBLESHOOTING (con't)

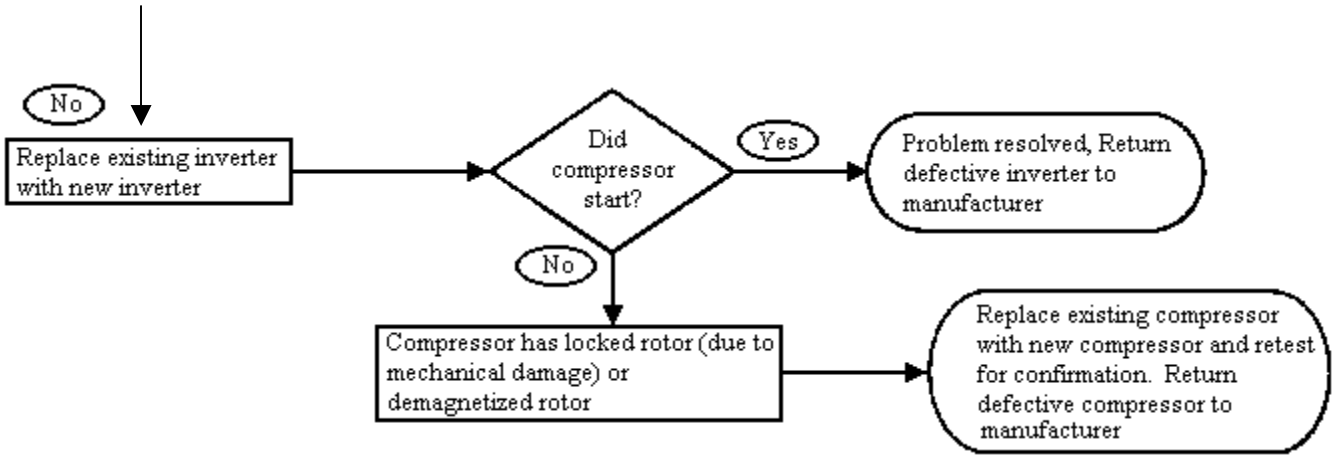

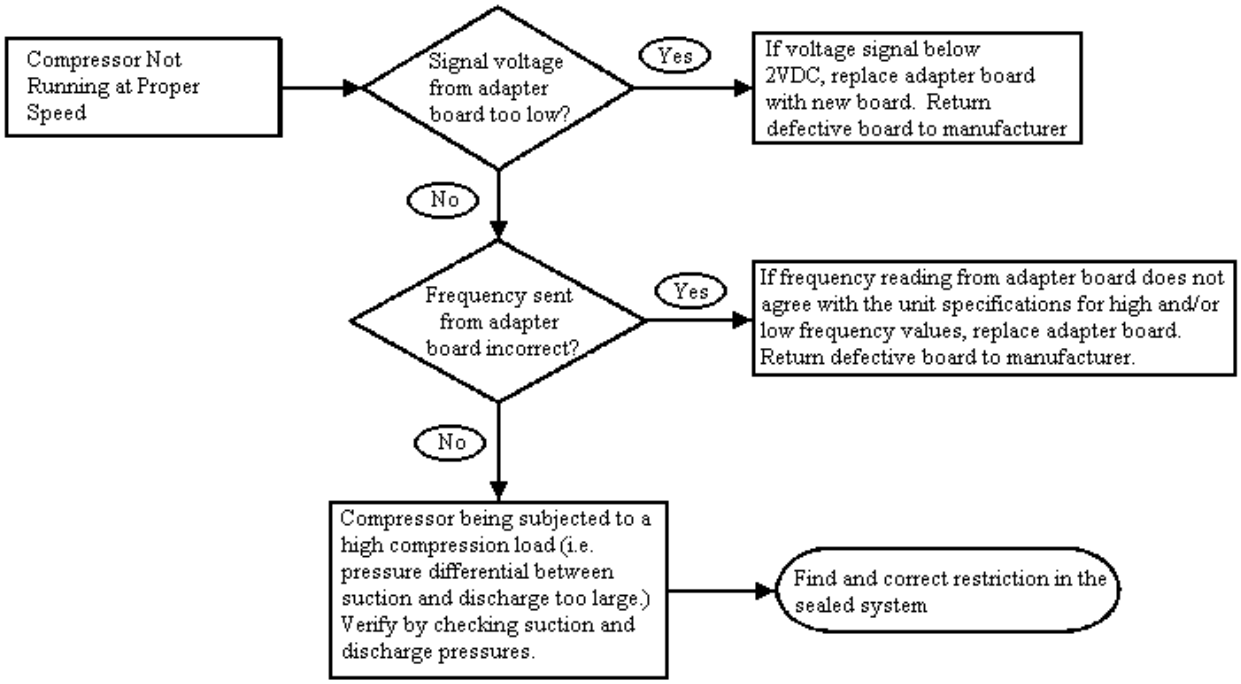

ICE MAKER

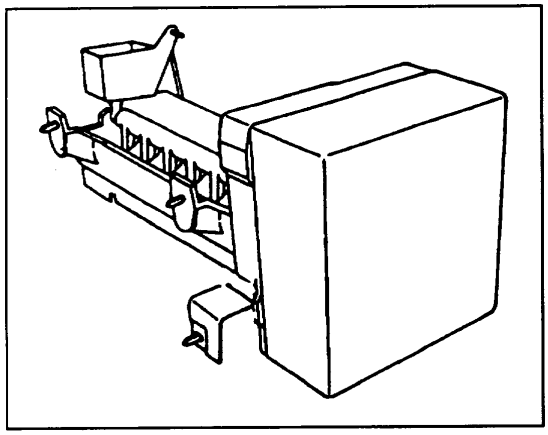

Operation

Thermostat closes when temperature reaches 17° ± 3°F (-8.3° ± 1.5°C). Current flows through thermostat to motor. See "Ice Maker Wiring Diagram". Motor is linked with drive gear. From module, there are copper contacts that ride on copper strips on backside of drive gear. As the drive gear rotates, contacts will make or break a circuit (tract) to the copper strips to operate ice maker.

All components can be tested without removing ice maker or moving refrigerator away from installation. Remove cover.

Test points are identified on module:

N = Neutral side of line
M = Motor connection
H = Heater connection
T = Thermostat connection
L = L1 side of line
V = Water valve connection

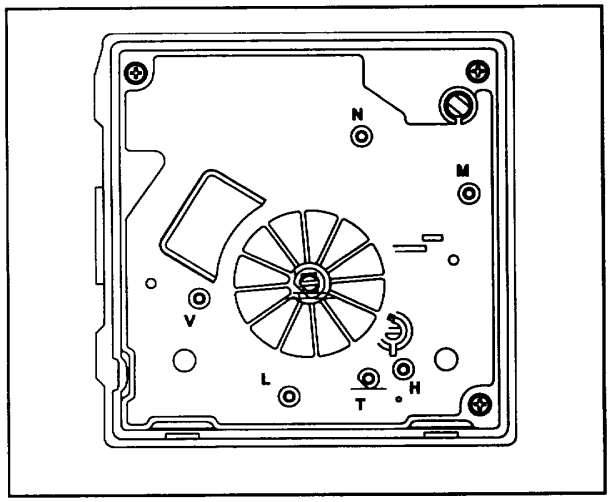

Specifications

Mold heater: 185 watts, 264 ohms
Thermostat: Close 17 ± 3° F (-8 ± 1° C)
(Bimetal) Opens 32 ± 3° F (0 ± 1° C)
Water fill: 140 cc, 7.5 sec.
Motor cycle Stamped in circuit.
Plug in connectors
One revolution of blades takes
3 minutes plug stall time on ice
(eject and water fill)

Testing Procedures

Verify ice maker has power, shut off arm is down, and freezer is cold enough to close bimetal thermostat.

- Test point L and N will verify 120 volts to ice maker module.
- Test point T and H will verify bimetal thermostat is open or closed.
- Verify test probes go into test points ½ inch (1.25 cm).

1. Short T and H with a shunt (insulated 14 gauge wire with ends stripped back 5/8 inch (1.6 cm) to run motor. If motor runs. Replace bimetal thermostat. If motor does not run, replace module.

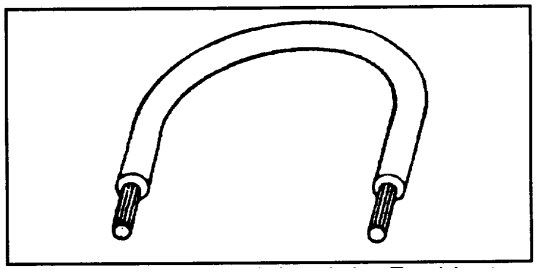

2. Leave jumper in for half of revolution. Touch heater mold. If heater mold feels warm, heater is working properly

3. Remove jumper. Water valve will be energized in last half of revolution if mold heater has not failed.

Caution
To avoid ice maker damage do not short any contacts together other than those specified.

Ice Maker

Module Ohmmeter Check No power to Ice Maker and Ejector Blades in End of Cycle Position			
Test Points	Component	Module Position	Ohms
L-H	Mold & Heater	Attached to Support	264
L-M	Motor	Separated form Heater	16,100

Module Voltage Checks with Meter or Test Light Power to Ice Maker			
Test Points	Component	Line Voltage	0 Volts
L-N	Module	Power On	Power Off
T-H	Bimetal	Open	Closed
L-H	Heater	On	Off
L-M	Motor	On	Off
N-V	Water Valve	On	Off

DISASSEMBLY PROCEDURES

Cover

1. Pull water adjustment knob forward.
2. Snap off cover.

WARNING: To avoid electrical shock which can cause severe personal injury or death, disconnect power to refrigerator using power switch before servicing. Wires removed during disassembly must be replaced on proper terminals to insure correct earthing and polarization. After servicing, reconnect power using power switch.

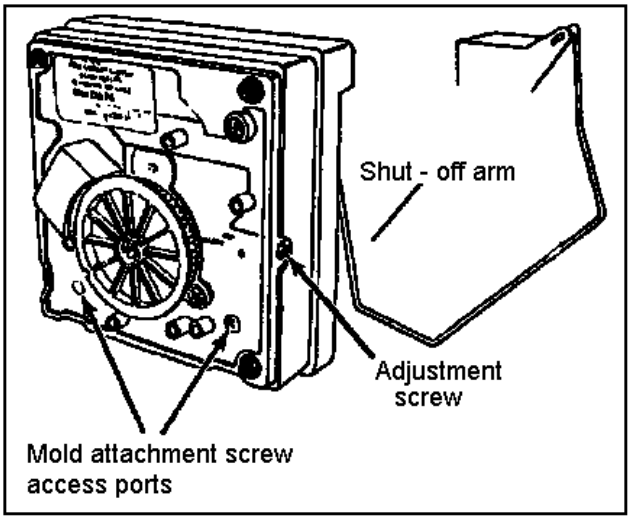

Module, Motor, and Support Assembly

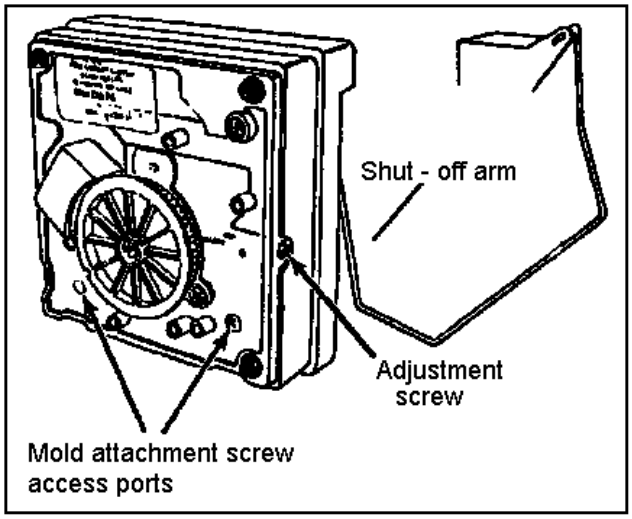

1. Loosen both screws in module access ports.
2. Disconnect shut-off arm.
3. Pull mold from support assembly.

Remove module only be removing 3 screws and pulling module out of housing.

Shut-Off Arm

1. Pull shut-off arm out from white bushing.
2. Replace by pushing completely in.
3. Follow steps below.

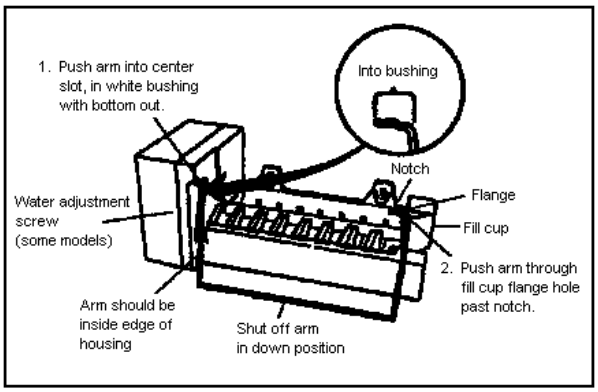

Module and Heater Assembly

1. Remove module and support assembly.
2. Install module and support assembly on replacement mold and heater assembly.

Fill Cup

1. Remove module and support assembly.
2. Remove ejector blades and shut-off arm.
3. Pull fill cup from mold.

Ice Maker

Ejector Blades or Stripper

1. Remove module and support assembly.
2. Install ejector blades, realigning "D" coupling with module cam.

Accessing Control Box

1. Remove motor and contact assembly from control box be removing 3 screws.
2. Remove shut-off arm.
3. Pull free.

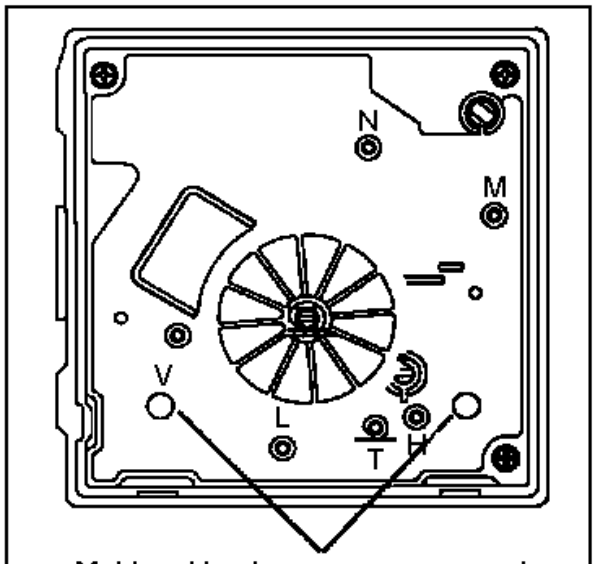

Mold and heater screw access ports

⚠CAUTION To avoid main assembly damage do not rotate blades or drive gear

Switches will jam if turned counterclockwise and gears will be destroyed if turned clockwise. Advance ice maker into cycle be using a jumper to bridge H to R. Ice maker will not run if motor is defective. Shut-off arm must be in on position.

There are several slotted shafts on motor assembly board. Do not insert screwdriver and attempt to turn shafts. Slots permit assembly only.

There are non-repairable and non-replaceable components in module. When diagnosing or repairing ice maker, do not remove module unless replacing module.

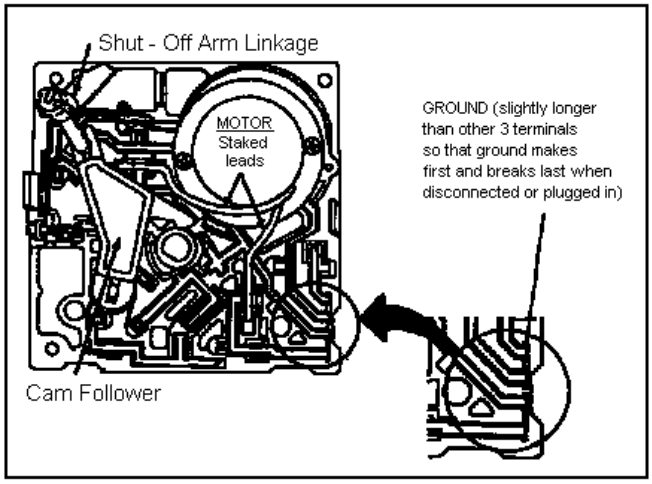

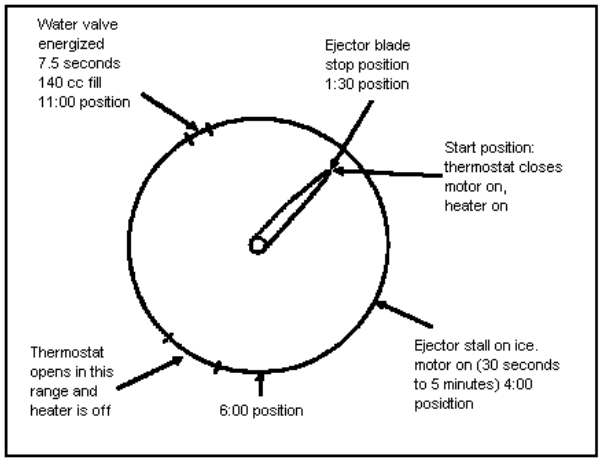

Water Fill Valve

Turning water level adjustment screw will move contact in relationship with contact ring segment. This causes contact to vary time water valve is energized. Contact ring is tapered at end of fill time.

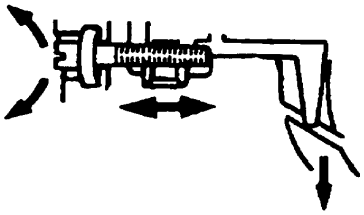

- Turning screw clockwise decreases fill time.
- Turning screw counterclockwise increases fill time.
- ½ turn equals 20 cc or 1.2 seconds.
- Full turn equals 40 cc or 2.4 seconds.

Ice Maker

CAUTION To avoid module damage do not rotate water adjustment screw more than one full turn in either direction.

If water valve adjustment screw fall out, put screw in hole and align as shown below.

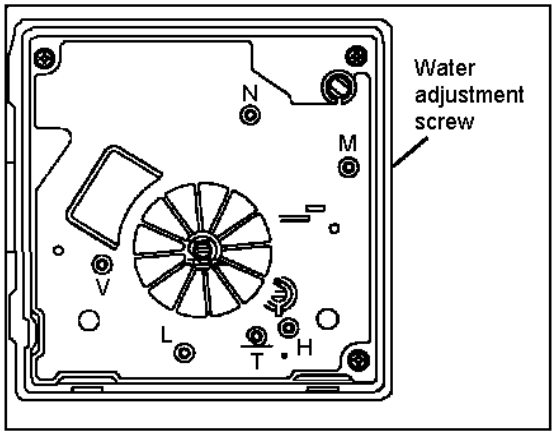

When small hole is centered in large hole, water fill adjustment is 7.5 seconds (normal fill time).

Water Problems

Poor water quality can cause ice maker to fail or produce unacceptable cubes. Mineral content or sand can restrict screen in water fill valve or particle of sand can keep valve from seating properly.

If water valve does not close, the following could occur

- no ice production
- small or hollow ice cubes
- flooding of ice container

Install water filter to eliminate bad taste, odor, and visible contaminates.

Mineral contact can cause lime build up in mold, Wicking of water over mold and poor cube release can occur. Silicone is applied at upper edges around fill cup and stripper.

Temperature Problems

Freezer temperatures above normal 0° ± 2° F (-18°± 1°C) will slow down ice production. Increase ice production by setting freezer to colder setting. Thermostat cycling temperature (1 revolution ice maker) is 17° ± 3° F (-8° ± 1°C). Ice will freeze when these temperatures are achieved. Cycling time will be slower if freezer temperature is not cold enough to achieve mode temperatures easily.

Thermostat, mold heater, and wiring harness are replaceable. Any other failure, including motor, requires replacement of module assembly. Replacement mold assembly comes with new mold heater installed.

Thermostat

1. Remove control box from mold by removing screws.

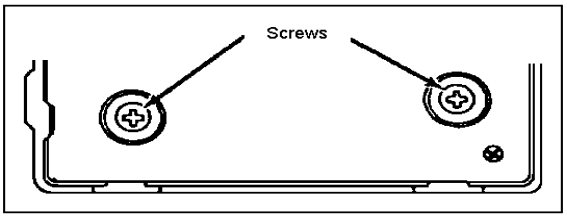

2. Pull front of black housing free of mold. Thermostat is on mold side.

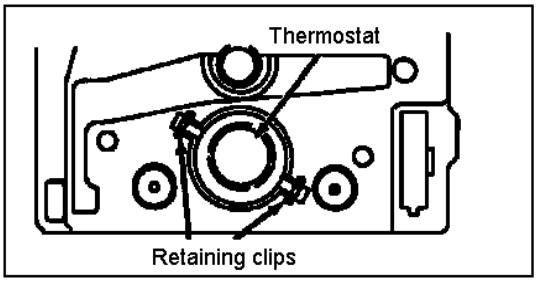

3. Grasp 1 thermostat clip and pull out.

4. Press in new thermostat. Verify pins are properly indexed. Electrical assembly does not need to be removed.
   If replacing module, transfer clips to new mold support. Use new thermal bonding material.

Wiring Harness

Remove wiring harness by pressing retaining tab and pulling forward.

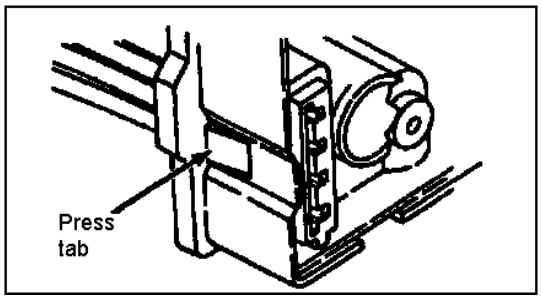

Ice Maker

⚠CAUTION
To avoid property damage, test for water leaks after repair or replacement of water valve. Do not overtighten connection to household water supply.

Water Valve

Water valve has 1 solenoid. Valve has 80 mesh screen water strainer. When solenoid is energized, the amount of water entering ice maker mold is directly proportional to length of time water valve switch is held closed by timing cam. Inside valve is a flow washer which acts as a water pressure regulator. Proper ice maker fill is 140cc ± 10cc at 7.5 seconds of water fill at an inlet pressure ranging from 20 to 120 PSI (1.4 to 8.2 bar).

Wire Harness
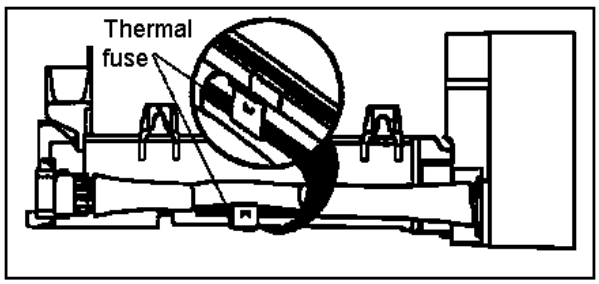
A non-resettable thermal fuse micro device 170° F (78°C) is spliced into black wire of ice maker wiring harness. Excessive heat can cause no ice production. Replacing wiring harness will only temporarily solve problem. Replace ice maker thermostats.